Clifton Water District

Desert Road Pump Station

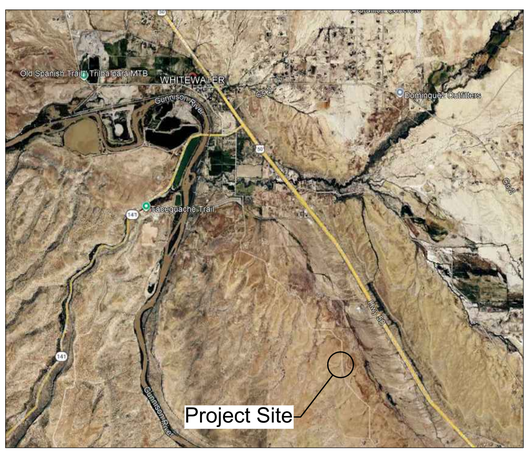

Vicinity Map

Scope of Work

- New Pump Station
- Yard Piping and Interconnections with Distribution System

Know what's **below.** **Call** before you dig.

UNCC 1-800-922-1987

SGM
118 West Sixth Street, Suite 200
Glenwood Springs, CO 81601
970.945.1004
www.sgm-inc.com

Project Engineer

Brandyn Bair, P.E. 42640

Owner/Applicant

Clifton Water District
510 34 Road
Clifton, Colorado 81520

Project Contacts

Jacob Lenihan	jacobl@cliftonwaterdistrict.org	(970)434-7328
Brandyn Bair	brandynb@sgm-inc.com	(970)384-9024

BID DRAWINGS

July 2026

Sheet Index

-	Cover
G1	General Notes
G2	Legend & Abbreviations
C1	Civil Site Plan
C2	Water Line Plan & Profiles
C3	Civil Details
C4	Civil Details
S1	General Notes
S2	Special Inspections
S3	Foundation & Framing Plans
S4	Roof Plan
S5	Sections
S6	Elevations
S7	Details
S8	Details
P1	Process Plans & Section
P2	Process Sections
P3	Process Details
M1	Mechanical Legend & Specifications
M2	Plans
M3	Schedules
E1	Electrical Legend and General Notes
E2	Electrical Site Plan
E3	Electrical Plan
E4	Schedules and Single Line Diagram
E5	2021 IECC Compliance
I1	Instrumentation & Controls

SGM
555 RiverGate Lane, Suite B4-82
Durango, CO 81301
970.385.2340
www.sgm-inc.com

Clifton Water District

Desert Road Pump Station

#	Revision	Date	By
1			
2			
3			

Project Milestone: FOR BID

Job No.	2025-354.02
Drawn by:	SK
Date:	07/23/2026
QC: BB	PE: BB
File:	DRPS-Admin

Title:

COVER

Dwg No.

I:\2025\2025-354-CliftonWaterOnCallEngin\02-Desert Rd Pump Station\H-Dwgs\Civil\PS-SheetSet\DRPS-Admin.dwg Plotted: 7/24/2026 2:32 PM By: Sarah Kothlow

GENERAL NOTES:

1. SURVEY BASE MAPPING WAS PREPARED BY SGM.
2. THE CONTRACTOR SHALL PROVIDE POTHOLING NEEDED TO IDENTIFY THE LOCATIONS OF THE WATER CONNECTION LOCATIONS AND ELEVATIONS.
3. THROUGHOUT ALL PHASES OF CONSTRUCTION, UNTIL THE FINAL ACCEPTANCE OF THE PROJECT, THE CONTRACTOR SHALL KEEP THE WORK SITE CLEAN AND FREE FROM RUBBISH AND DEBRIS. THE CONTRACTOR SHALL ALSO ABATE DUST NUISANCE AS NECESSARY BY CLEANING, SWEEPING AND SPRINKLING WITH WATER OR OTHER MEANS AS NECESSARY.

GENERAL CIVIL NOTES:

1. ALL CONSTRUCTION SHALL BE PERFORMED IN ACCORDANCE WITH THE PROJECT SPECIFICATIONS AND DISTRICT CONSTRUCTION STANDARDS.
2. THE CONTRACTOR SHALL HAVE AT LEAST ONE SIGNED COPY OF THE APPROVED PLANS AND SPECIFICATIONS FOR CONSTRUCTION ON THE JOB SITE AT ALL TIMES.
3. THE CONTRACTOR SHALL VERIFY INVERTS WHEN CONNECTING TO EXISTING UTILITIES AND NOTIFY ENGINEER OF ANY DISCREPANCIES BETWEEN FIELD AND PROJECT DRAWINGS.
4. ALL PERMITS REQUIRED SHALL BE OBTAINED BY THE CONTRACTOR WHO SHALL COMPLY WITH THE CONDITIONS THEREOF.
5. THE APPROXIMATE LOCATION OF ALL KNOWN UTILITIES (WATER, SEWER, GAS, PHONE, CABLE, ETC.) ARE SHOWN ON THE DRAWINGS. THE CONTRACTOR SHALL CALL FOR LOCATES AND CONTACT ALL UTILITY OWNERS TO VERIFY BOTH LOCATION AND DEPTH OF UTILITIES BEFORE ANY WORK BEGINS. CONTRACTOR SHALL BEAR THE RESPONSIBILITY FOR THE PROTECTION OF UTILITIES DURING CONSTRUCTION. NO ADDITIONAL PAYMENT SHALL BE MADE FOR UTILITIES LOCATED BUT NOT SHOWN ON THE DRAWINGS.
6. STAGING AND STORAGE AREAS ARE AVAILABLE AT THE SITE.
7. CONTRACTOR SHALL BE RESPONSIBLE FOR ALL TEMPORARY PROTECTION, REMOVAL, AND REINSTALLATION OF ALL AREAS AFFECTED BY THE WORK.
8. CONTRACTOR SHALL BE RESPONSIBLE FOR THE COMPLETION OF RECORD DRAWINGS OF NEW WORK. A CLEAN SET OF AS-BUILT DRAWINGS AND ELECTRONIC DOCUMENTS SHALL BE MAINTAINED AND GIVEN TO THE CITY AT THE END OF THE JOB.
9. CONTRACTOR WILL BE RESPONSIBLE FOR RESTORING ANY DISTURBED AREAS IN ACCORDANCE WITH THE PROJECT SPECIFICATIONS.
10. THE OWNER WILL CONTRACT WITH A GEOTECHNICAL FIRM TO PERFORM MATERIALS TESTING. CONTRACTOR WILL BE RESPONSIBLE FOR COORDINATING WITH THE MATERIALS TESTER AS TO WHEN THEY WILL BE NEEDED. ANY RETESTS WILL BE PAID FOR BY CONTRACTOR.
11. ALL MATERIALS AND CONSTRUCTION SHALL MEET THE APPROVAL OF THE CLIFTON WATER DISTRICT.
12. CONTRACTOR SHALL COORDINATE ALL WORK EFFORT WITH DISTRICT STAFF AND ENGINEER.
13. CONTRACTOR WILL BE REQUIRED TO HAUL OFF EXCESS SPOIL MATERIAL AND ANY MISCELLANEOUS DEBRIS AND DISPOSE OF OFF-SITE AT AN APPROVED DISPOSAL SITE.

EXISTING UTILITY SURVEY NOTES

1. THIS PROJECT DOES MEET THE CONDITIONS FOR A "SUBSURFACE UTILITY ENGINEERING-REQUIRED PROJECT," AS SET FORTH IN THE 8/8/2018 COLORADO STATE LAW.
2. UTILITY DEPICTION NOTES:

   2.1. UNDERGROUND UTILITIES WERE LOCATED AND SURVEYED BY SGM STAFF. THE SURVEYED LOCATIONS OF UNDERGROUND UTILITIES ARE BASED ON PAINT MARKS AND PIN FLAGS ON THE GROUND.

   2.2. EXISTING UTILITIES ARE DEPICTED ACCORDING TO THE BEST AVAILABLE INFORMATION, ARE NOT GUARANTEED TO BE ALL INCLUSIVE, AND REPRESENT CONDITIONS AT THE TIME OF DATA COLLECTION. RELIANCE UPON THIS UTILITY DATA FOR RISK MANAGEMENT PURPOSES DOES NOT RELIEVE CLIENT/CONTRACTOR OR UTILITY OWNER FROM FOLLOWING ALL APPLICABLE UTILITY DAMAGE PREVENTION STATUTES, POLICIES, AND/OR PROCEDURES DURING EXCAVATION. PRIOR TO EXCAVATION, CLIENT/CONTRACTOR SHALL CONTACT THE UTILITY NOTIFICATION CENTER OF COLORADO (UNCC) AT 811 OR 800-922-1987, TO VERIFY EXISTING UTILITIES AND HAVE LOCATIONS OF UNCC REGISTERED LINES MARKED BY MEMBER COMPANIES. ADDITIONAL SURVEYING WORK MAY BE REQUIRED TO UPDATE THIS DRAWING IF ADDITIONAL UNDERGROUND UTILITY LINES ARE PRESENTED BY UTILITY OWNERS. SGM WILL NOT BE RESPONSIBLE FOR THE PROTECTION OF UNDERGROUND UTILITIES.

   2.3. ANY SUBSURFACE UTILITIES NOT SHOWN, WERE NOT MARKED BY APPROPRIATE UTILITY COMPANIES AT THE TIME OF THIS SURVEY AND THEREFORE MAY NOT BE SHOWN HEREON. UNDERGROUND UTILITIES LOCATES HAVE BEEN MARKED BY SGM. ONLY PAINT MARKS AND UTILITY PIN FLAGS ON THE GROUND SURFACE WERE SURVEYED BY SGM AS PART OF THIS SURVEY. CLIENT/CONTRACTOR MUST CONTACT SPECIFIC UTILITY COMPANIES TO VERIFY BOTH THE LOCATION AND DEPTH OF RESPECTIVE UTILITIES. ADDITIONAL SURVEYING WORK MAY BE REQUIRED TO SHOW ANY SUCH SUBSURFACE UTILITY LOCATIONS ON THIS DRAWING. SGM WILL NOT BE RESPONSIBLE FOR PROTECTION OF SUBSURFACE UTILITIES.

3. THE CLIENT/CONTRACTOR SHALL COMPLY WITH COLORADO REVISED STATUTES (CRS) 2018, TITLE 9, ARTICLE 1.5-103 (10), "All NEW UNDERGROUND FACILITIES, INCLUDING LATERALS UP TO THE STRUCTURE OR BUILDING BEING SERVED, INSTALLED ON OR AFTER 8/8/2018, MUST BE ELECTRONICALLY LOCATABLE WHEN INSTALLED."

PROCESS NOTES:

1. ALL PIPING AND PLUMBING SHALL BE BRACED AND SUPPORTED IN ACCORDANCE WITH SPECIFICATIONS. COORDINATE QUANTITY AND LOCATION OF PIPE SUPPORTS BETWEEN PLAN AND SECTION VIEWS.
2. CONTRACTOR SHALL ORIENT ALL ACTUATORS FOR PROPER ACCESS. ALL INTERIOR PIPING SHALL BE FLANGED CLASS 52 DUCTILE IRON PIPE UNLESS OTHERWISE SPECIFIED ON THE PLANS.
3. ALL ELECTRICAL PENETRATIONS SHALL BE SEALED WITH POLYURETHANE CAULKING ON BOTH THE INTERIOR AND EXTERIOR SIDE OF THE PENETRATION.
4. PROCESS DRAWINGS ARE SHOWN WITH FLANGED JOINTS WITH FLANGED COUPLING ADAPTERS.
5. ALL GRATING SHALL BE CUT IN PANELS FOR EASY REMOVAL. PANELS SHALL NOT EXCEED 4 FEET IN WIDTH. CONTRACTOR SHALL FIELD CUT GRATING AS NEEDED TO PROVIDE MINIMUM OPERATIONAL CLEARANCE.
6. MEGAFLANGES/UNIFLANGES MAY BE USED TO ALLOW FOR FIELD ADJUSTMENTS, HOWEVER, A MAXIMUM OF (1) MAY BE USED IN THE TOTAL RUN IN GIVEN DIRECTION (I.E. (1) IN THE VERTICAL PLANE AND (1) IN THE HORIZONTAL PLANE). SOME LOCATIONS ARE ALREADY DEFINED IN THESE PLANS.
7. CONTRACTOR TO PROVIDE WATERSTOP ON ALL WALL PIPES.

LANDSCAPE NOTES:

1. ALL AREAS DISTURBED BY BUILDING OR UTILITY CONSTRUCTION OR OVER-LOT GRADING SHALL BE REVEGETATED WITH DRYLAND SEED MIXTURE. PROVIDE FRESH, CLEAN, NEW-CROP SEED COMPLYING WITH TOLERANCE FOR PURITY AND GERMINATION ESTABLISHED BY OFFICIAL SEED ANALYSIS OF NORTH AMERICA. PROVIDE SEED OF GRASS SPECIES, PROPORTIONS AND MINIMUM PERCENTAGES OF PURITY, GERMINATION, AND MAXIMUM PERCENTAGE OF WEED SEED, AS SPECIFIED.
2. FOR DRYLAND SEEDED AREAS, PROVIDE FERTILIZER WITH COMMERCIAL TYPE MIXTURE OF 16-16-8 OR SIMILAR RATION, NOT LESS THAN 15 LBS PER ACRE FOR NITROGEN RATE.
3. MULCH ALL SEEDED AREAS WITH CONWEB LONG FIBER MULCH, HAY OR STRAW. MATERIAL FOR STRAW MULCHING SHALL CONSIST OF STRAW OR OATS, BARLEY, WHEAT OR RYE AND SHALL NOT CONTAIN SEED OF NOXIOUS WEEDS. CLEAN FIELD HAY MAY BE SUBSTITUTED FOR STRAW WHEN APPROVED BY THE ENGINEER. STRAW OR HAY IN SUCH AN ADVANCED STAGE OR DECOMPOSITION AS TO SMOTHER OR RETARD THE NORMAL GROWTH OF GRASS WILL NOT BE ACCEPTED. CONWEB FIBER MULCH, PREVIOUSLY SPECIFIED, SHALL BE APPLIED AT A RATE OF 1500 LBS./ACRE. HAY OR STRAW SHALL BE APPLIED IN A UNIFORM MANNER AT A RATE OF 1.5 TONS/ACRE.
4. PROVIDE EROSION CONTROL BLANKET ON ALL SLOPES OF 2:1 OR STEEPER.
5. PRIOR TO REVEGETATION, PLANTING OR TOPSOIL PLACEMENT, ALL CUT OR FILL SLOPES WILL BE CONTOURED TO BLEND WITH ADJACENT TERRAIN. VARIOUS SLOPE MOLDING TECHNIQUES WILL BE USED TO ENHANCE THE AESTHETIC QUALITY OF THE SLOPE, WHILE MAXIMIZING THE REVEGETATION POTENTIAL. ALL CUT AND FILL SLOPES ALSO BEING ROUNDED AT THE TOE TO BLEND WITH THE EXISTING TERRAIN. ADDITIONALLY, WHERE SOILS AND STEEPNESS OF SLOPES PERMIT, TERRACES WILL BE CONSTRUCTED TO AID THE REVEGETATION PROCESS.
6. SEEDING SHALL BE DONE BY HYDROSEEDING, DRILLING, OR HAND BROADCASTING. HYDROSEED SHALL BE APPLIED IN A WATER AND LIGHT MULCH SLURRY AFTER WHICH MULCH WILL BE APPLIED TO COVER THE SEED. ANY AREAS THAT CANNOT BE REACHED BY HYDROSEEDING OR DRILL SEEDING SHALL BE HAND BROADCAST. AREAS SEEDED BY HAND BROADCASTING SHALL BE LIGHTLY RAKED.
7. DRYLAND SEEDING SHALL BE PERFORMED AS SOON AS PRACTICAL AFTER COMPLETING OF CONSTRUCTION, WITHIN THE APPROPRIATE SEASON. SEEDING SHALL BE PERFORMED AFTER SPRING THAW UNTIL JUNE 30TH, OR AFTER SEPTEMBER 1 UNTIL CONSISTENT GROUND FREEZE. CONTRACTOR SHALL BE RESPONSIBLE FOR REGULAR WATERING UNTIL ESTABLISHED.

GENERAL WATER NOTES:

1. ALL WATER MAINS SHALL BE INSTALLED WITH A 3.5' MINIMUM DEPTH OF COVER. IF GRADE CONFLICTS OCCUR WITH EXISTING UTILITIES OR OTHER OBSTRUCTIONS, THE PROPOSED WATER MAINS GRADE CAN BE VARIED PROVIDED 4' MINIMUM AND 10' MAXIMUM DEPTH OF COVER IS MAINTAINED WITHOUT CREATING A HIGH POINT..
2. ALL YARD PIPING SHALL BE C900 PVC PIPE. TRACER WIRE IS REQUIRED ON ALL PIPES.
3. ALL FITTINGS (BENDS, CROSSES, PLUGS, VALVES AND TEES) SHALL HAVE BOTH CONCRETE THRUST BLOCK AND MEG-A-LUGS INSTALLED IN ACCORDANCE WITH THE THRUST BLOCK TABLE SHOWN ON THE DETAIL SHEET. ALL FITTINGS SHALL BE POLYWRAPPED, VALVES SHALL NOT BE POLYWRAPPED.
4. THE WATER LINE LOCATION SHOWN UTILIZES JOINT DEFLECTION. (A MAX. OF 1.5° PER JOINT) IN NO CASE SHALL FIELD DEFLECTIONS EXCEED MANUFACTURERS REC'S.
5. ALL FITTINGS SHALL BE CLASS 150 DUCTILE IRON PIPE, OF MECHANICAL JOINT OR FLANGED FITTING AS DICTATED BY THE APPURTENANCES TO BE INSTALLED.
6. GATE VALVES SHALL BE INSTALLED FOR ALL BURIED VALVES 12" AND SMALLER. GATE VALVES SHALL BE RESILIENT SEAT, EPOXY COATED, MECHANICAL JOINT OR FLANGED, AS REQUIRED, NON-RISING VALVE STEM, AND SHALL OPEN BY TURNING TO THE LEFT, COUNTER-CLOCKWISE. GATE VALVES SHALL CONFORM TO AWWA SPECIFICATIONS C-509.
7. THE CONTRACTOR SHALL ENSURE PIPES ARE FREE OF GRAVEL AND DEBRIS PRIOR TO BEING INSTALLED IN THE TRENCH. IF THE PIPE IS DIRTY, HAS GRAVEL OR DEBRIS INSIDE, OR HAS SAT UNUSED FOR A LONG PERIOD OF TIME, THE PIPE WILL REQUIRE CLEANING PRIOR TO INSTALLATION.
8. CONCRETE THRUST BLOCKS SHALL BE FORMED AND POURED IN-PLACE AGAINST NATIVE SOIL OR SOIL WITH PROPER COMPACTION ON ALL FITTINGS AS DEFINED BY PROJECT ENGINEER, INCLUDING TAPS 4" OR LARGER. POLY WRAP BOND BREAKER SHALL BE INSTALLED BETWEEN CONCRETE AND ALL PIPES AND ASSOCIATED APPURTENANCES.
9. THE CONTRACTOR SHALL NOTIFY THE CLIFTON WATER DISTRICT STAFF AT LEAST 48 HOURS PRIOR TO THE START OF TIE-IN CONSTRUCTION.
10. A CHLORINATION/BACTERIOLOGICAL, HYDROSTATIC/LEAKAGE AND CONDUCTIVITY TESTS WILL BE REQUIRED ON ALL NEW LINES AND SYSTEMS BEFORE ACCEPTANCE BY THE DISTRICT. THESE TESTS SHALL BE PERFORMED AS PER APPLICABLE ANSI/AWWA STANDARD C651.

TRACER WIRE SPECIFICATIONS

1. PER COLORADO LAW, ALL NEW UNDERGROUND FACILITIES (UTILITIES), INCLUDING LATERALS OR SERVICES UP TO THE BUILDING BEING SERVED, SHALL BE ELECTRONICALLY LOCATABLE WHEN INSTALLED. ALL NON-ENERGIZED UTILITIES SHALL HAVE TRACER WIRE PROPERLY INSTALLED WITH THE UTILITY. (UNLESS THE UTILITY IS METALLIC AND SPECIFICALLY DESIGNED TO BE LOCATED THROUGH THE PIPE MATERIAL.)
2. TRACER WIRE
   - 2.1. OPEN TRENCH INSTALLATIONS – TRACER WIRE SHALL BE #12 AWG COPPER CLAD STEEL, HIGH STRENGTH WITH MINIMUM 450 LB. BREAK LOAD, OR SOLID CU, AND WITH MINIMUM 30 MIL HDPE INSULATION THICKNESS.
   - 2.2. DIRECTIONAL DRILLING/BORING OPEN TRENCH INSTALLATIONS – TRACER WIRE SHALL BE #12 AWG COPPER CLAD STEEL, EXTRA HIGH STRENGTH WITH MINIMUM 1,150 LB. BREAK LOAD, WITH MINIMUM 30 MIL HDPE INSULATION THICKNESS.
   - 2.3. PIPE BURSTING/SLIP LINING – TRACER WIRE SHALL BE 7 X 7 STRANDED COPPER CLAD STEEL, EXTREME STRENGTH WITH 4,700 LB. BREAK LOAD, WITH MINIMUM 50 ML HDPE INSULATION THICKNESS
   - 2.4. USE OF THNN IS STRICTLY PROHIBITED
3. CONNECTORS
   - 3.1. ALL MAINLINE TRACER WIRES MUST BE INTERCONNECTED IN INTERSECTIONS, AT MAINLINE TEES AND MAINLINE CROSSES. AT TEES, THE THREE WIRES SHALL BE JOINED USING A SINGLE 3-WAY LOCKABLE CONNECTOR (SNAKEBITE OR APPROVED EQUAL). AT CROSSES, THE FOUR WIRES SHALL BE JOINED USING A 4-WAY CONNECTOR. USE OF TWO 3-WAY CONNECTORS WITH A SHORT JUMPER WIRE BETWEEN THEM IS AN ACCEPTABLE ALTERNATIVE.
   - 3.2. DIRECT BURY WIRE CONNECTORS – SHALL INCLUDE SNAKEBITE 3-WAY LOCKABLE CONNECTORS (OR APPROVED EQUAL) AND MAINLINE TO LATERAL LUG CONNECTORS SPECIFICALLY MANUFACTURED FOR USE IN UNDERGROUND TRACER WIRE INSTALLATION. CONNECTORS SHALL BE DIELECTRIC SILICON FILLED TO SEAL OUT MOISTURE AND CORROSION AND SHALL BE INSTALLED IN A MANNER SO AS TO PREVENT ANY UNINSULATED WIRE EXPOSURE.
   - 3.3. NON-LOCKING FRICTION FIT, TWIST ON OR TAPED CONNECTORS ARE PROHIBITED.
4. TERMINATION/ACCESS
   - 4.1. ALL TRACER WIRE TERMINATION POINTS MUST UTILIZE AN APPROVED TRACER WIRE ACCESS BOX (ABOVE GROUND ACCESS BOX OR GRADE LEVEL/IN-GROUND ACCESS BOX AS APPLICABLE), SPECIFICALLY MANUFACTURED FOR THIS PURPOSE.
   - 4.2. ALL GRADE LEVEL/IN-GROUND ACCESS BOXES SHALL INCLUDE A DUAL TERMINAL SWITCHABLE LID (SNAKEPITÒ LD14G2T-SW OR APPROVED EQUAL), BE APPROPRIATELY IDENTIFIED WITH "SEWER" CAST INTO THE CAP, AND COLOR CODED PER APWA STANDARD FOR THE SPECIFIC UTILITY BEING MARKED.
   - 4.3. A MINIMUM OF 2 FT. OF EXCESS/SLACK WIRE IS REQUIRED IN ALL TRACER WIRE ACCESS BOXES AFTER MEETING FINAL ELEVATION.
   - 4.4. ALL TRACER WIRE ACCESS BOXES MUST INCLUDE A MANUALLY INTERRUPTIBLE CONDUCTIVE/CONNECTIVE LINK BETWEEN THE TERMINAL(S) FOR THE TRACER WIRE CONNECTION AND THE TERMINAL FOR THE GROUND ROD WIRE CONNECTION.
   - 4.5. GROUND WIRE SHALL BE CONNECTED TO THE IDENTIFIED (OR BOTTOM) TERMINAL ON ALL ACCESS BOXES.
   - 4.6. SERVICE LATERALS ON PUBLIC PROPERTY – TRACER WIRE MUST TERMINATE WITH A COIL OF 6 FEET OF TRACER WIRE FOR FUTURE EXTENSION TO THE BUILDING, LOCATED AT THE EDGE OF THE ROAD RIGHT-OF-WAY, AND OUT OF THE ROADWAY.
   - 4.7. SERVICE LATERALS ON PRIVATE PROPERTY – TRACER WIRE MUST TERMINATE AT AN APPROVED ABOVE-GROUND TRACER WIRE ACCESS BOX, AFFIXED TO THE BUILDING EXTERIOR DIRECTLY ABOVE WHERE THE UTILITY ENTERS THE BUILDING, AT AN ELEVATION NOT GREATER THAN 5 VERTICAL FEET ABOVE FINISHED GRADE, OR TERMINATE AT AN APPROVED GRADE LEVEL/IN-GROUND TRACER WIRE ACCESS BOX, LOCATED WITHIN 2 LINEAR FEET OF THE BUILDING BEING SERVED BY THE UTILITY.
   - 4.8. LONG-RUNS, IN EXCESS OF 2,500 LINEAR FEET – TRACER WIRE ACCESS MUST BE PROVIDED UTILIZING AN APPROVED GRADE LEVEL/IN-GROUND TRACER WIRE ACCESS BOX, LOCATED AT THE EDGE OF THE ROAD RIGHT-OF-WAY AND OUT OF THE ROADWAY. THE GRADE LEVEL/IN-GROUND TRACER WIRE ACCESS BOX SHALL BE DELINEATED USING A MINIMUM 48" POLYETHYLENE MARKER POST, COLOR CODED PER APWA STANDARD FOR THE SPECIFIC UTILITY BEING MARKED OR OTHER APPROVED MARKER BY THE CITY OF PUEBLO. GROUNDING
5. GROUNDING
   - 5.1. TRACER WIRE MUST BE PROPERLY GROUNDED AT ALL DEAD ENDS/STUBS.
   - 5.2. GROUNDING OF TRACER WIRE SHALL BE ACHIEVED BY USE OF A DRIVE-IN MAGNESIUM GROUND ROD WITH A MINIMUM OF 20FT OF #12 RED HDPE INSULATED COPPER CLAD STEEL WIRE CONNECTED TO ANODE (MINIMUM 1.5 LB.) SPECIFICALLY MANUFACTURED FOR THIS PURPOSE AND BURIED AT THE SAME ELEVATION AS THE UTILITY.
   - 5.3. WHEN GROUNDING THE TRACER WIRE AT DEAD ENDS/STUBS, THE GROUND ROD SHALL BE INSTALLED IN A DIRECTION 180 DEGREES OPPOSITE OF THE TRACER WIRE, AT THE MAXIMUM POSSIBLE DISTANCE.
   - 5.4. WHEN GROUNDING THE TRACER WIRE IN AREAS WHERE THE TRACER WIRE IS CONTINUOUS AND NEITHER THE MAINLINE TRACER WIRE OR THE GROUND ROD WIRE WILL BE TERMINATED AT/ABOVE GRADE, INSTALL GROUND ROD WIRE DIRECTLY BENEATH AND IN-LINE WITH THE TRACER WIRE. DO NOT COIL EXCESS WIRE FROM GROUND ROD WIRE. IN THIS INSTALLATION METHOD, THE GROUND ROD WIRE SHALL BE TRIMMED TO AN APPROPRIATE LENGTH BEFORE CONNECTING TO TRACER WIRE WITH A MAINLINE TO LATERAL LUG CONNECTOR.
   - 5.5. WHERE THE GROUND ROD WIRE WILL BE CONNECTED TO A TRACER WIRE ACCESS BOX, A MINIMUM OF 2 FT. OF EXCESS/SLACK WIRE IS REQUIRED AFTER MEETING FINAL ELEVATION.
6. INSTALLATION
   - 6.1. TRACER WIRE SYSTEMS MUST BE INSTALLED AS A SINGLE CONTINUOUS WIRE, EXCEPT WHERE USING APPROVED CONNECTORS. NO LOOPING OR COILING OF WIRE IS ALLOWED.
   - 6.2. ANY DAMAGE OCCURRING DURING INSTALLATION OF THE TRACER WIRE MUST BE IMMEDIATELY REPAIRED BY REMOVING THE DAMAGED WIRE AND INSTALLING A NEW SECTION OF WIRE WITH APPROVED CONNECTORS. TAPING AND/OR SPRAY COATING SHALL NOT BE ALLOWED.
   - 6.3. TRACER WIRE SHALL BE INSTALLED AT THE TOP OF THE PIPE AND SECURED (TAPED/TIED) AT 5' INTERVALS
   - 6.4. MAINLINE TRACER WIRE SHALL NOT BE CONNECTED TO EXISTING CONDUCTIVE PIPES. TREAT AS A MAINLINE DEAD-END AND GROUND USING AN APPROVED WATERPROOF CONNECTION TO A GROUND ROD BURIED AT THE SAME DEPTH AS THE TRACER WIRE.
   - 6.5. ALL SERVICE LATERAL TRACER WIRES SHALL BE A SINGLE WIRE, CONNECTED TO THE MAINLINE TRACER WIRE USING AN APPROVED MAINLINE TO LATERAL LUG CONNECTOR, INSTALLED WITHOUT CUTTING/SPLICING THE MAINLINE TRACER WIRE.
   - 6.6. IN OCCURRENCES WHERE AN EXISTING TRACER WIRE IS ENCOUNTERED ON AN EXISTING UTILITY THAT IS BEING EXTENDED OR TIED INTO, THE NEW TRACER WIRE AND EXISTING TRACER WIRE SHALL BE CONNECTED USING APPROVED SPLICE CONNECTORS AND SHALL BE PROPERLY GROUNDED AT THE SPLICE LOCATION AS SPECIFIED.
7. STORM AND SANITARY SYSTEMS
   - 7.1. ALL SERVICE LATERAL TRACER WIRES MUST BE PROPERLY CONNECTED TO THE MAINLINE TRACER WIRE TO ENSURE FULL TRACING/LOCATING CAPABILITIES FROM A SINGLE CONNECTION POINT.
   - 7.2. LAY MAINLINE TRACER WIRE CONTINUOUSLY, BY-PASSING AROUND THE OUTSIDE OF MANHOLES/STRUCTURES ON THE NORTH OR EAST SIDE.
   - 7.3. TRACER WIRE ON ALL SEWER LATERALS MUST TERMINATE AT THE PROPERTY LINE WITH A COIL OF 6 FEET OF TRACER WIRE TAPED DIRECTLY TO THE SERVICE LATERAL AT THE EDGE OF THE ROAD RIGHT-OF-WAY OR AT AN APPROVED LOCATION.
8. WATER SYSTEMS
   - 8.1. A MAINLINE TRACER WIRE MUST BE INSTALLED, WITH ALL SERVICE LATERAL TRACER WIRES PROPERLY CONNECTED TO THE MAINLINE TRACER WIRE, TO PROMOTE TRACING/LOCATING CAPABILITIES FROM A SINGLE CONNECTION POINT.
   - 8.2. LAY MAINLINE TRACER WIRE CONTINUOUSLY, BY-PASSING AROUND THE OUTSIDE OF VALVES AND FITTINGS ON THE NORTH OR EAST SIDE.
   - 8.3. A SINGLE TRACER WIRE ONLY SHALL BE INSTALLED ON ALL WATER SERVICE LATERALS AND MUST TERMINATE AT AN APPROVED TRACER WIRE ACCESS POINT, COLOR CODED BLUE AND LOCATED DIRECTLY ABOVE THE SERVICE LATERAL AT THE EDGE OF ROAD RIGHT-OF-WAY.
   - 8.4. TRACER WIRE ACCESS POINTS WILL BE INSTALLED AT ALL FIRE HYDRANTS.
   - 8.5. ALL CONDUCTIVE AND NON-CONDUCTIVE SERVICE LINES SHALL INCLUDE TRACER WIRE.
9. TESTING
   - 9.1. ALL NEW TRACER WIRE INSTALLATIONS SHALL BE LOCATED USING TYPICAL LOW FREQUENCY (512HZ) LINE TRACING EQUIPMENT, WITNESSED BY THE CONTRACTOR, ENGINEER AND/OR FACILITY OWNER AS APPLICABLE, PRIOR TO ACCEPTANCE OF OWNERSHIP.
   - 9.2. CONTINUITY TESTING IN LIEU OF ACTUAL LINE TRACING SHALL NOT BE ACCEPTED.

SGM
118 West Sixth Street, Suite 200
Glenwood Springs, CO 81601
970.945.1004
www.sgm-inc.com

Clifton Water District

Desert Road Pump Station

#	Revision	Date	By:
1			
2			
3			

Project Milestone: FOR BID

Job No.	2025-354.02
Drawn by:	SK
Date:	07/23/2026
QC: BB	PE: BB
File:	DRPS-Admin

Title:

GENERAL NOTES

Dwg No.

G1

I:\2025\2025-354-CliftonWaterDistEngin\02-Desert Rd Pump Station\H-Dwgs\Civil\PS-SheetSet\DRPS-Admin.dwg Plotted: 7/27/2026 4:03 PM By: Sarah Kothlow

Legend

UTILITY LINE TYPES WITH "QUALITY LEVELS"

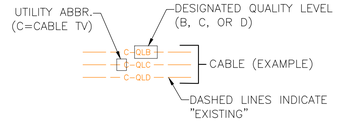

C-QLB	CABLE COMMUNICATION
T-QLB	TELEPHONE
F-QLB	FIBER OPTIC
TR-QLB	TRAFFIC COMMUNCATION
E-QLB	ELECTRIC
ET-QLB	ELECTRIC TRANSMISSION
G-QLB	GAS
HPG-QLB	HIGH PRESSURE GAS
CA-QLB	COMPRESSED AIR
S-QLB	SANITARY SEWER
DR-QLB	DRAIN LINE (STORM SEWER)
W-QLB	WATER
IRR-QLB	IRRIGATION
NP-QLB	NON-POTABLE WATER
UNK	UNKNOWN UTILITY

SYMBOL	DESCRIPTION
C E F T TR U	MARKERS (CATV, ELEC, FIBER) (TELE, TRAFFIC, UNKNOWN)
C E F T TR U	PEDESTALS (CATV, ELEC, FIBER) (TELE, TRAFFIC, UNKNOWN)
D E F IR S T U W	MANHOLES (DRAINAGE, ELEC, FIBER, IRRIGATION, SANITARY, TELEPHONE, UNKNOWN, WATER)
C E F T TR U	VAULTS/HANDHOLES (CATV, ELEC, FIBER, TELE, TRAFFIC, UNKNOWN)
ET SC	ELECTRIC TRANSFORMER, SWITCH CABINET
GV SV ICV	VALVES (WATER, GAS, SANITARY, IRRIGATION)
	WATER SHUTOFF VALVE
	FIRE HYDRANT
	WATER SPIGOT
RV RV RV	VENTS(GAS,WATER,SEWER,MISC.)
EM EM WM	METERS (GAS, ELECTRIC, WATER)
G M W	WELL (GAS, MONITOR, WATER)
CO	CLEAN-OUT
P P	PROPANE TANK (ABOVE-GROUND, UNDERGROUND)
ICB	IRRIGATION CONTROL BOX
SPR	IRRIGATION SPRINKLER HEAD
	IRRIGATION HEAD GATE
	PVC PIPE "RISER"
	UTILITY POLE
	GUY WIRE
	STREET LIGHT POLE
	TRAFFIC LIGHT POLE
	CHANGE IN QUALITY LEVEL
TH	UTILITY TEST HOLE LOCATION

Abbreviations/Acronyms

AASHTO	AMERICAN ASSOCIATION OF STATE HIGHWAY AND TRANSPORTATION OFFICIALS
ABC	AGGREGATE BASE COURSE
ADS	ADVANCED DRAINAGE SYSTEM
ADT	AVERAGE DAILY TRAFFIC
AP	ANGLE POINT
AS	ASPHALT
ASCE	AMERICAN SOCIETY OF CIVIL ENGINEERS
ASPH	ASPHALT
BF	BLOCK FACING
BHEN	BLACK HILLS ENERGY
BMP	BEST MANAGEMENT PRACTICES
BOW	BACK OF SIDEWALK
BP	BEGIN PROJECT
BVCE	BEGIN VERTICAL CURVE ELEVATION
BVCS	BEGIN VERTICAL CURVE STATION
BW	BOTTOM WALL
C	CABLE TELEVISION
C	CURB
CATV	CABLE TELEVISION
CC	CURB CUT
CDOT	COLORADO DEPARTMENT OF TRANSPORTATION
CDPHE	COLORADO DEPARTMENT OF PUBLIC HEALTH AND ENVIRONMENT
CG	CURB AND GUTTER
CL	CENTERLINE
CMCT	COMCAST
CMP	CORRUGATED METAL PIPE
CNLK	CENTURYLINK (AKA LUMEN)
CO	CONCRETE
CONC	CONCRETE
CONST	CONSTRUCTION
CONT.	CONTINUOUS
COR.	CORNER
CRB	CONCRETE REACTION BLOCK
CU	CUBIC
D	DEEP
DB	DIRECT BURIED
DIP	DUCTILE IRON PIPE
DR	DRAIN
DW	DRIVEWAY
E	EASTING
E	ELECTRIC
EA.	EACH
EG	EXISTING GRADE
EL	ELEVATION
ELEV	ELEVATION
EOA	EDGE OF ASPHALT
EOD	EDGE OF DRIVEWAY
EOP	EDGE OF PAVEMENT
EOG	EDGE OF GRAVEL
EOS	END OF SIGNAL (SUE)
EP	END PROJECT
ESMT	EASEMENT
EVCE	END VERTICAL CURVE ELEVATION
EVCS	END VERTICAL CURVE STATION
EX.	EXISTING
EXIST.	EXISTING
FF	FINISH FLOOR
FG	FINISHED GRADE
FH	FIRE HYDRANT
FHWA	FEDERAL HIGHWAY ADMINISTRATION
FL	FLOWLINE
FO	FIBER OPTIC
FT.	FEET
G	GAS
GB	GRADE BREAK
GPR	GROUND PENETRATING RADAR
GR	GRAVEL
GRAV.	GRAVEL
HC	HANDICAP RAMP
HMA	HOT MIX ASPHALT
HORIZ.	HORIZONTAL
HH	HAND HOLE
HP	HIGH POINT
HPG	HIGH PRESSURE GAS
HWY	HIGHWAY
HYD	HYDRANT
ICB	IRRIGATION CONTROL BOX
ICV	IRRIGATION CONTROL VALVE
INV.	INVERT
IRR	IRRIGATION
L	LEFT
LF	LINEAL FEET
LP	LOW POINT
L.S.	LANDSCAPED AREA
MAT'L	MATERIAL
MAX.	MAXIMUM
MH	MANHOLE
MIN.	MINIMUM
MHT	METHOD OF HANDLING TRAFFIC
ML	MEGALUG
MLW	MASONRY LANDSCAPE WALL
MPH	MILES PER HOUR
N	NORTHING
N/A	NOT APPLICABLE
NAT.	NATIVE GRASS AREA
NE	NORTH EAST
NHS	NATIONAL HIGHWAY SYSTEM
NO.	NUMBER
N.T.S.	NOT TO SCALE
NW	NORTH WEST
OC	ON CENTER
O/S	OFFSET
PC	POINT OF CURVATURE
PCL	PIPE AND CABLE LOCATE
PERM	PERMANENT
PG	PAGE
PGL	PROFILE GRADE LINE
PI	POINT OF INTERSECTION
PL	PROPERTY LINE
PNT	POINT
POL	POINT ON LINE
PROP	PROPOSED
PT	POINT OF TANGENCY
PVC	POLYVINYL CHLORIDE (PLASTIC PIPE)
PVI	POINT OF VERTICAL INTERSECTION
PVMT	PAVEMENT
QL	QUALITY LEVEL
QLA	QUALITY LEVEL A
QLB	QUALITY LEVEL B
QLC	QUALITY LEVEL C
QLD	QUALITY LEVEL D
R	RIGHT
R-R	REMOVE & REPLACE
RAD.	RADIUS
RCP	REINFORCED CONCRETE PIPE
REF.	REFERENCE
REQ.	REQUIRED
REQ.'D	REQUIRED
REVEG	REVEGETATE
ROW	RIGHT-OF-WAY
RP	RADIUS POINT
RW	RETAINING WALL
SAN	SANITARY
SD	STORM DRAIN
SECT.	SECTION
SF	SQUARE FEET
SHDR	SHOULDER
SMH	SANITARY MANHOLE
SOD	GRASS AREA
S.S.D.	STOPPING SIGHT DISTANCE
STA.	STATION
SE	SOUTH EAST
SL	SEWER LINE
STM	STORM
SUE	SUBSURFACE UTILITY ENGINEERING
SW	SIDEWALK
T	TELEPHONE
T	TREAD STAIRS
TBC	TOP BACK CURB
TC	TOP CURB
TELE	TELEPHONE
TEMP	TEMPORARY
TH	TEST HOLE
TP	TOP OF PIPE
TRANS.	TRANSITION
TR.FLG.	TRAFFIC FLANGE ON FIRE HYD.
TW	TOP OF WALL
TYP.	TYPICAL
UTH	UTILITY TEST HOLE
VC	VERTICAL CURVE
V.P.	VALLEY PAN
W	WATER
W	WIDE
W/	WITH
WL	WATER LINE
W.W.M.	WELDED WIRE MESH
X-S	CROSS SLOPE

SGM
118 West Sixth Street, Suite 200
Glenwood Springs, CO 81601
970.945.1004
www.sgm-inc.com

Clifton Water District

Desert Road Pump Station

#	Revision	Date	By
1			
2			
3			

Project Milestone: FOR BID

Job No.	2025-354.02
Drawn by:	SK
Date:	07/23/2026
QC: BB	PE: BB
File:	DRPS-Admin

Title:

LEGEND & ABBREVIATIONS

Dwg No.

G2

I:\2025\2025-354-CliftonWaterOnCallEngin\02-Desert Rd Pump Station\H-Dwgs\Civil\PS-SheetSet\DRPS-Admin.dwg Plotted: 7/23/2026 4:13 PM By: Sarah Kohlaw

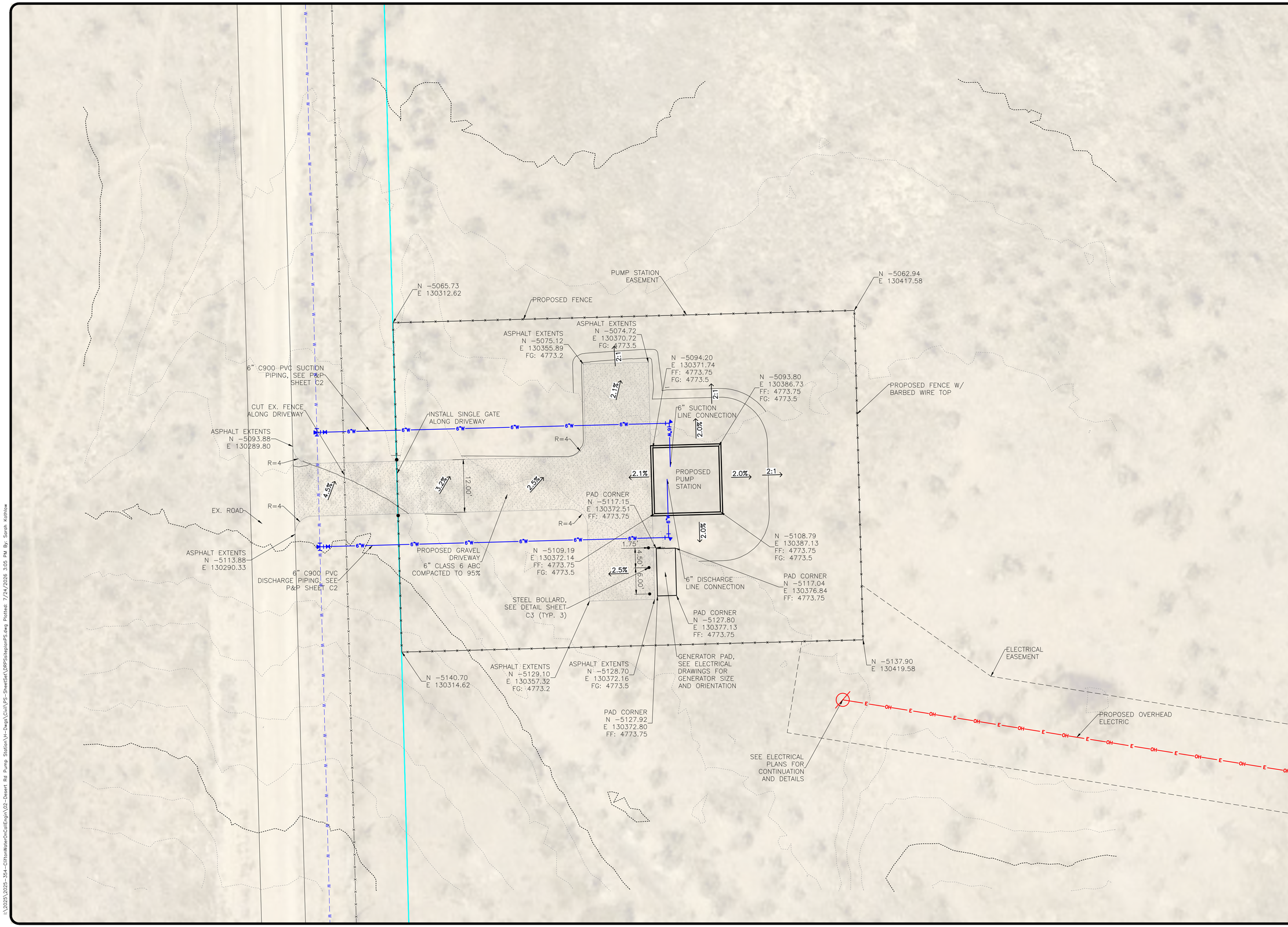

Graphic Scale

0 5 10 20

In Feet: 1" = 10'

SGM
118 West Sixth Street, Suite 200
Glenwood Springs, CO 81601
970.945.1004
www.sgm-inc.com

Clifton Water District

Desert Road Pump Station

#	Revision	Date	By:
1			
2			
3			

Project Milestone: FOR BID

Job No.	2025-354.02
Drawn by:	SK
Date:	07/23/2026
QC:	BB PE: BB
File:	DRPSiteplanPS

Title:

CIVIL SITE PLAN

Dwg No.

C1

Of: X

I:\2025\2025-354-CliftonWaterDistCivilEngr\02-Desert Rd Pump Station\VI-Dwgs\Civil\PS-SheetSet\DRPSiteplanPS.dwg Plotted: 7/24/2026 3:05 PM By: Sarah Kothlow

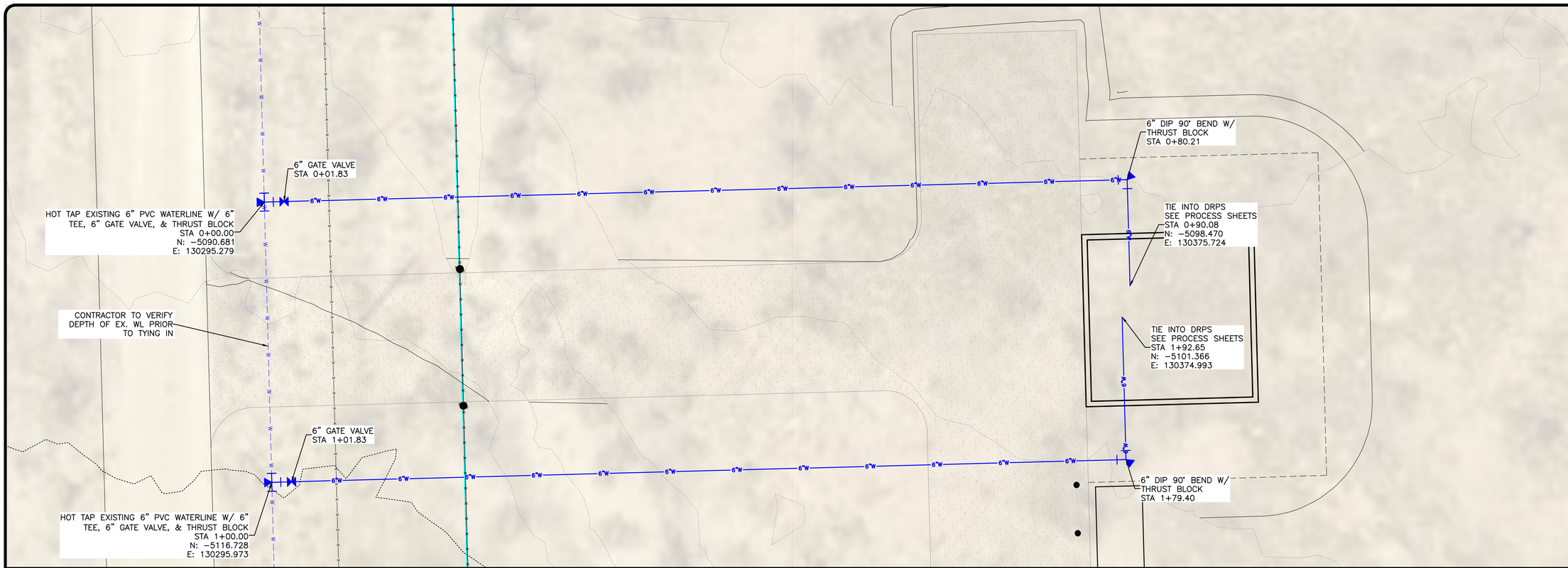

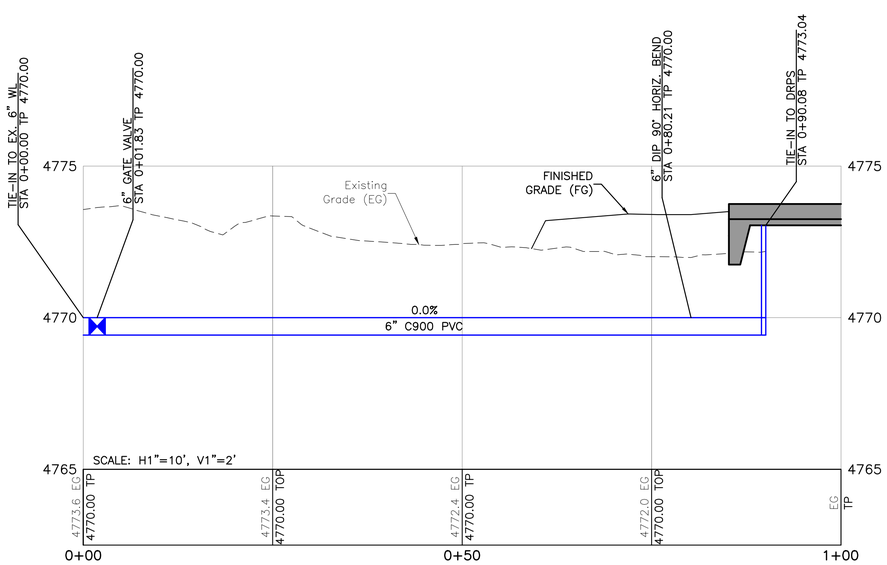

SUCTION WATER LINE PROFILE

H: 1"=10', V: 1"=2'

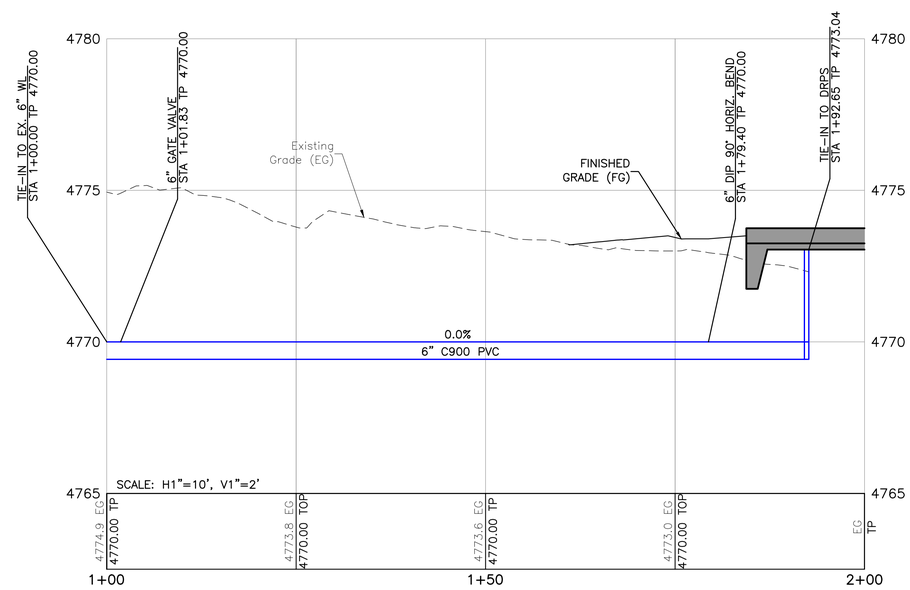

DISCHARGE WATER LINE PROFILE

H: 1"=10', V: 1"=2'

Graphic Scale

0 3 5 10

In Feet: 1" = 5'

SGM
118 West Sixth Street, Suite 200
Glenwood Springs, CO 81601
970.945.1004
www.sgm-inc.com

Clifton Water District

Desert Road Pump Station

#	Revision	Date	By
1			
2			
3			

Project Milestone: FOR BID

Job No.	2025-354.02
Drawn by:	SK
Date:	07/23/2026
QC:	BB PE: BB
File:	DRPSsiteplanPS

Title:

WATER LINE PLAN & PROFILES

Dwg No.

C2

Of: X

I:\2025\2025-354-CliftonWaterOnCallEngin\02-Desert Rd Pump Station\H-Dwgs\Civil\PS-SheetSet\DRPSsiteplanPS.dwg Plotted: 7/27/2026 4:05 PM By: Sarah Kothlow

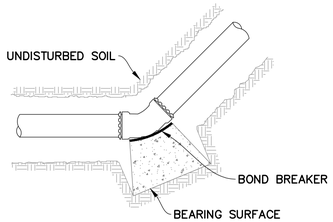

BENDS OF 22 1/2° OR GREATER

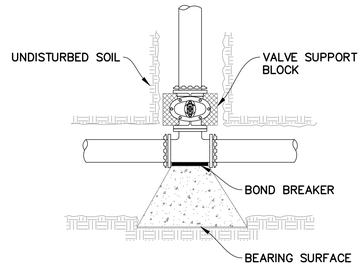

TEES

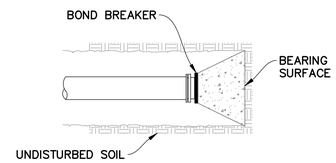

DEAD ENDS

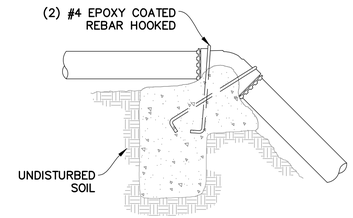

OVER BENDS

THRUST BLOCK DETAILS
(MIN. 1/2 CU. YD. CONCRETE)

TABLE FOR CONCRETE THRUST BLOCKING

BEARING AREAS (IN SQ. FT.)					
SIZE	BENDS				TEE BRANCH SIZE AND DEAD ENDS
	90°	45°	22 1/2°	11 1/4°	
3	1.0	0.6	0.3	*0.3	0.7
4	1.8	1.0	0.5	*0.5	1.3
6	4.0	2.2	1.1	*1.1	2.8
8	7.1	3.8	2.0	1.0	5.0
10	11.1	6.0	3.0	1.5	7.8
12	16.0	8.6	4.4	2.2	11.3
14	21.7	11.8	6.0	3.0	15.4
15	25.0	13.5	7.0	3.5	17.6
16	28.4	15.3	8.0	4.0	20.0
18	36.0	19.4	10.0	5.0	25.4
20	44.2	24.0	12.2	6.1	31.4
21	49.0	26.5	13.5	6.8	34.6
22	54.0	29.0	14.8	7.4	38.0
24	64.0	34.5	17.7	8.8	45.0
30	100.0	54.0	27.6	13.8	71.0
FIRE HYDRANT THRUST BLOCKS SHALL BE A MIN OF 1/4 CU. YD. IN MASS AND HAVE A MIN BEARING AREA OF 5 SQ. FT.					

AREAS GIVEN ARE BASED ON INTERNAL STATIC PRESSURE OF 100 P.S.I. AND SOIL BEARING CAPACITY OF 1,000 lbs. PER SQ. FT.

AREAS FOR ANY PRESSURE AND SOIL BEARING CAPACITY MAY BE OBTAINED BY MULTIPLYING TABULATED VALUES BY A CORRECTION FACTOR "F"

$F = \frac{\text{ACTUAL SPECIFIED TEST PRESSURE IN HUNDREDS OF lbs PER SQ. INCH.}}{\text{ACTUAL SOIL BEARING CAPACITY IN THOUSANDS OF lbs.}}$

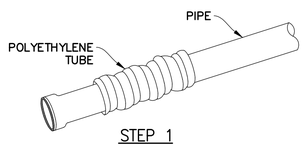

STEP 1

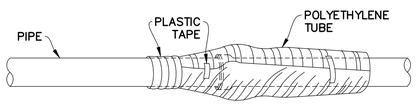

STEP 2

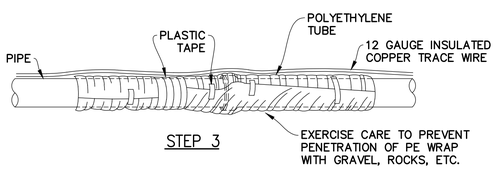

STEP 3

FIELD INSTALLATION – POLYETHYLENE WRAP
WHERE SPECIFICALLY REQUIRED FOR SOIL APPLICATIONS
STEP 1 – PLACE TUBE OF POLYETHYLENE MATERIAL ON PIPE PRIOR TO LOWERING IT INTO PLACE
STEP 2 – PULL THE TUBE OVER THE LENGTH OF THE PIPE. TAPE TUBE TO PIPE AT JOINT. FOLD MATERIAL AROUND THE ADJACENT SPIGOT END AND WRAP THE TAP TO HOLD THE PLASTIC TUBE IN PLACE.
STEP 3 – OVERLAP FIRST TUBE WITH ADJACENT TUBE AND SECURE WITH PLASTIC ADHESIVE TAPE. THE POLYETHYLENE TUBE MATERIAL COVERING THE PIPE SHALL BE LOOSE. EXCESS MATERIAL SHALL BE NEATLY DRAWN UP AROUND THE PIPE BARREL. FOLDED ON TOP OF PIPE AND TAPED IN PLACE.

POLYETHYLENE WRAP DETAIL
NTS

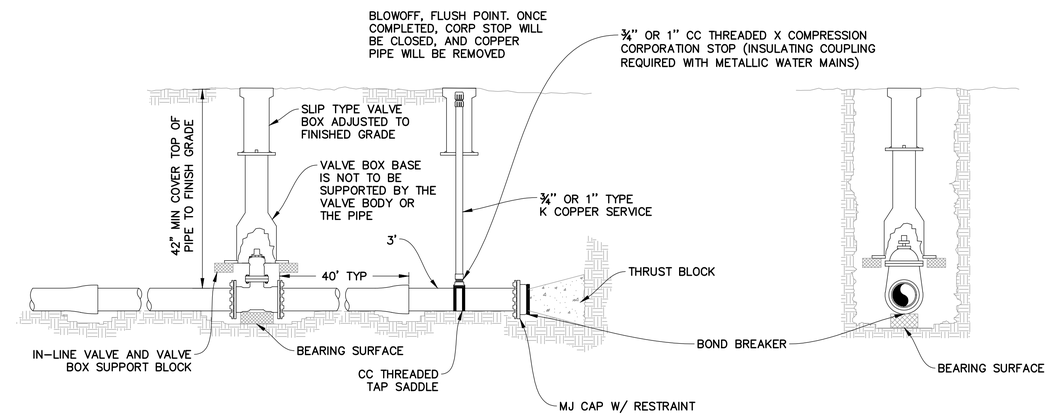

VALVE INSTALLATION & LINE TERMINATION
NTS

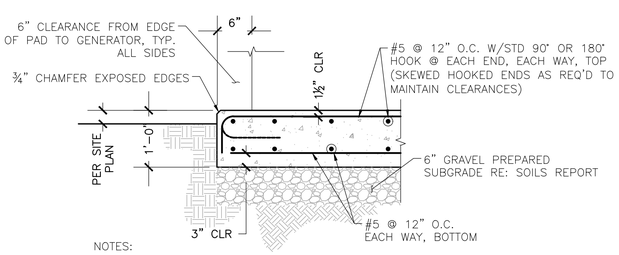

NOTES:

1. CONTRACTOR SHALL CONFIRM LOCATION OF ALL CONDUIT PENETRATIONS REQUIRED FOR GENERATOR PRIOR TO POURING PAD.
2. CONTRACTOR SHALL FOLLOW MANUFACTURER REQUIREMENTS FOR ANCHORING GENERATOR TO PAD.

GENERATOR PAD DETAIL
NTS

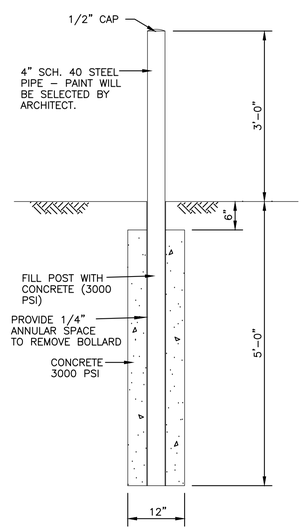

STEEL BOLLARD DETAIL
NTS

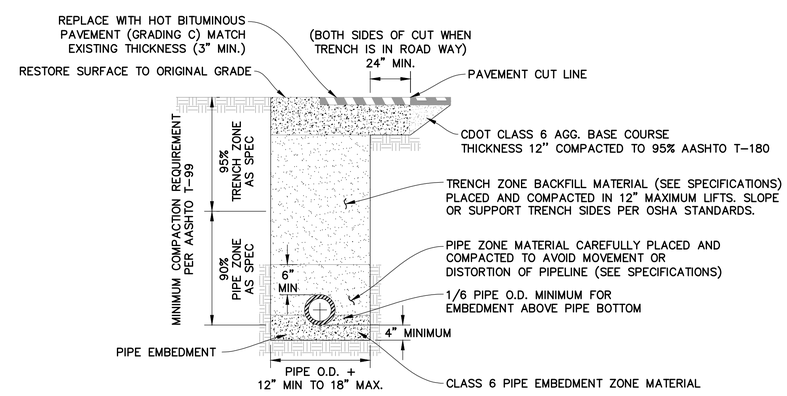

TRENCH DETAIL
NTS

SGM
118 West Sixth Street, Suite 200
Glenwood Springs, CO 81601
970.945.1004
www.sgm-inc.com

Clifton Water District

Desert Road Pump Station

#	Revision	Date	By
1	Revised Detail 2	02.25.26	SF
2			
3			

Project Milestone: FOR BID

Job No.	2025-354.02
Drawn by:	SK
Date:	07/23/2026
QC:	BB PE: BB
File:	DRPS-Admin

Title: CIVIL DETAILS

Dwg No. C3

I:\2025\2025-354-CliftonWaterDistCivilEngin\02-Desert Rd Pump Station\H-Dwgs\Civil\PS-SheetSet\DRPS-Admin.dwg Plotted: 7/23/2026 4:15 PM By: Sarah Kothlow

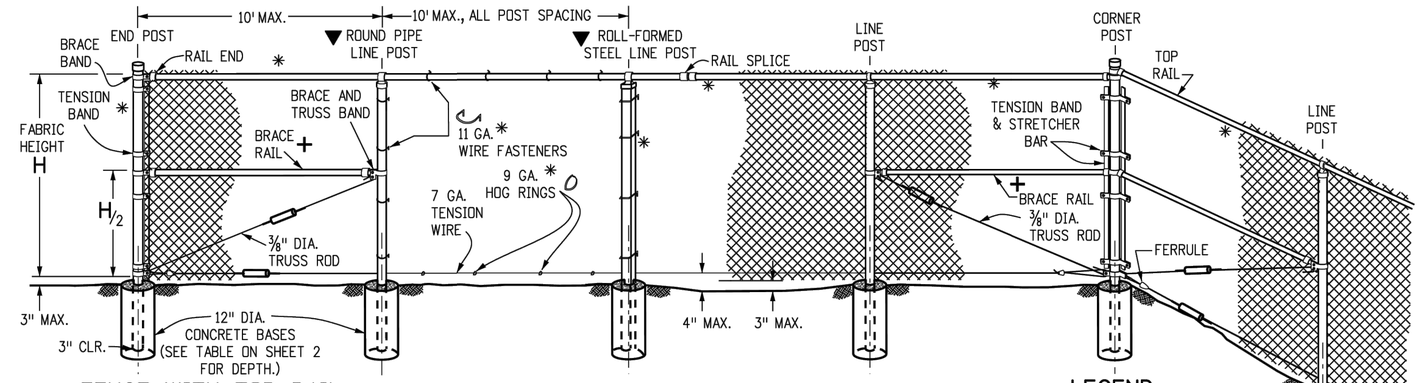

FENCE WITH TOP RAIL

(USE ONLY AT SPECIAL LOCATIONS BEYOND CLEAR ZONE WHEN THE TOP RAIL IS SPECIFIED ON PLANS)

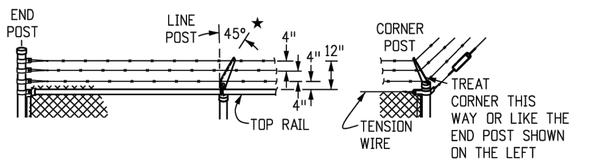

BARBED WIRE TOP

(USE ONLY WHEN SPECIFIED ON PLANS)

LEGEND

- * ATTACH FABRIC TO ALL FENCE & GATE STRUCTURES AT 12 IN. INTERVALS VERTICALLY AND AT 20 IN. HORIZONTALLY.
- TIGHTENER OR TURNBUCKLE SYMBOL, (SEE DETAILS ON SHEETS 2 AND 3).
- ▼ TYPE OF LINE POST (ROUND PIPE OR ROLL-FORMED STEEL) SHALL BE AT THE OPTION OF THE CONTRACTOR UNLESS OTHERWISE SHOWN ON THE PLANS.
- + BRACE RAIL IS NOT REQUIRED FOR 36 IN., 42 IN., OR 48 IN. FABRIC HEIGHTS. BRACE RAIL FOR FENCE WITH ROLL-FORMED STEEL ELEMENTS IS 12 IN. BELOW THE TOP RAIL, (SEE SHEET 3).
- ★ CASE 1. TO KEEP INSIDERS IN, SLOPE TOP IN 45°
- ★ CASE 2. TO KEEP OUTSIDERS OUT, SLOPE TOP OUT 45° BARBED WIRE OVER GATES SHALL NOT BE SLOPED

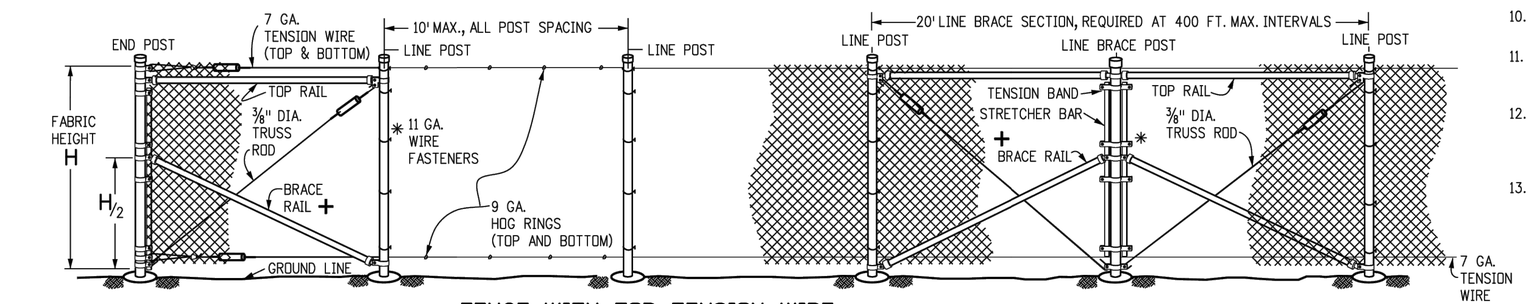

FENCE WITH TOP TENSION WIRE

(USE FOR STANDARD CHAIN LINK FENCE)

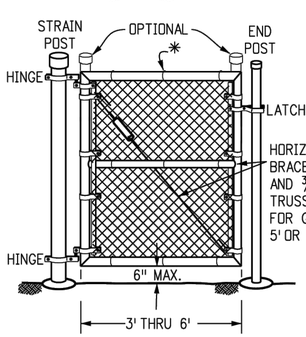

WALK GATE

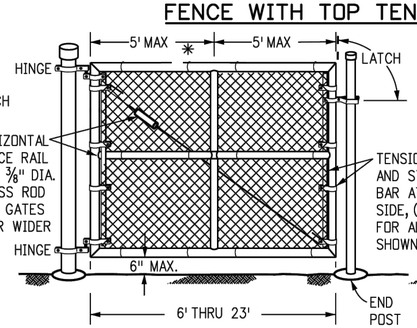

SINGLE GATE

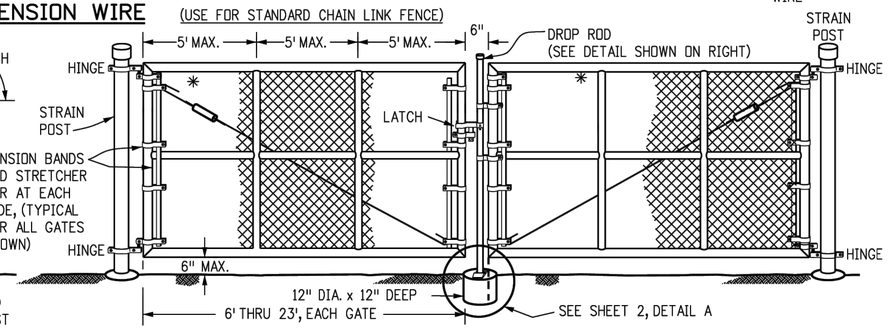

DOUBLE GATE

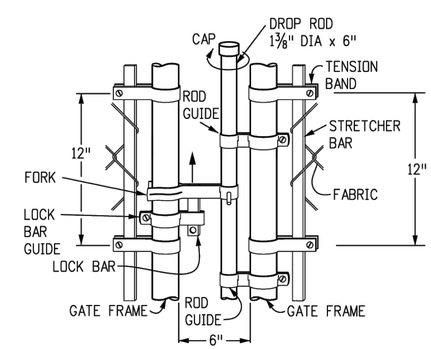

TYPICAL DROP ROD ASSEMBLY

GENERAL NOTES

1. AT EACH LOCATION WHERE AN ELECTRIC TRANSMISSION, DISTRIBUTION, OR SECONDARY LINE CROSSES A FENCE, THE CONTRACTOR SHALL FURNISH AND INSTALL A GROUND CONFORMING TO ARTICLE 250 OF THE NATIONAL ELECTRIC CODE. A GROUND SHALL ALSO BE INSTALLED A MAXIMUM OF EVERY 500 FT. ALONG THE FENCE. THE GROUND ROD SHALL BE A MINIMUM DIAMETER OF 1/2 IN. AND 8 FT. IN LENGTH, AND DRIVEN AT LEAST 7 1/2 FT. INTO THE GROUND. THE ROD SHALL BE CONNECTED TO EACH WIRE WITH A MINIMUM AWG NO. 8 STRANDED COPPER WIRE. GROUNDING WILL NOT BE PAID FOR SEPARATELY BUT SHALL BE INCLUDED IN THE COST OF THE FENCE.
2. H (HEIGHT OF FABRIC) SHALL BE AS SHOWN ON THE PLANS. FABRIC IS AVALIABLE IN THE FOLLOWING HEIGHTS: 36 IN., 42 IN., 48 IN., 60 IN., 72 IN., 84 IN., 96 IN., 108 IN., 120 IN., AND 144 IN.
3. CHAIN LINK FENCE SHALL CONFORM TO AASHTO M 181.
4. CHAIN LINK FABRIC SHALL BE 2 IN. MESH NO. 9 GAGE GALVANIZED OR ALUMINUM COATED WIRE SECURELY FASTENED TO TENSION WIRE, LINE POSTS, RAILS, BRACES AND STRETCHER BARS SPACED AS SHOWN HEREON. WIRE FASTENERS AND TIE CLIPS SHALL BE NO. 11 GAGE (W&M) GALVANIZED STEEL WIRE OR NO. 7 GAGE (B&S) ALUMINUM WIRE, AND HOG RINGS SHALL BE NO. 9 GAGE, ALL IN CONFORMANCE WITH ASTM F 626.
5. STEEL POSTS, RAILS AND GATE FRAMES SHALL CONFORM TO AASHTO M 181 TYPE 1, GRADE 1 OR GRADE 2.
6. AT THE CONTRACTOR'S OPTION, PIPE USED FOR FENCE CONSTRUCTION SHALL CONFORM TO THE DIMENSIONS AND WEIGHTS FOR EITHER "ORDINARY PIPE" OR "ALTERNATIVE PIPE" AS SHOWN ON SHEET 2. "ALTERNATIVE PIPE" SHALL BE HIGH STRENGTH STEEL PIPE CONFORMING TO FEDERAL SPECIFICATION RR-F-191/3C.
7. TENSION WIRE SHALL BE CONTINUOUS BETWEEN END OR CORNER POST AND LINE BRACE POST. A TURNBUCKLE OR OTHER APPROVED TIGHTENING DEVICE SHALL BE USED FOR EACH CONTINUOUS SPAN OF TENSION WIRE.
8. TENSION WIRE SHALL CONFORM TO AASHTO M 181.
9. CONCRETE FOOTINGS SHALL HAVE TOPS CROWNED AT GROUND LEVEL AND SHALL BE CLASS B. CONCRETE WITH LIGHTWEIGHT AGGREGATE CONFORMING TO AASHTO M 195, MAY BE SUBSTITUTED.
10. TERMINATION OF FENCE AT BRIDGES OR OTHER STRUCTURES SHALL BE AS SHOWN ON THE PLANS.
11. CHAIN LINK FABRIC UP TO 5 FT. HIGH SHALL BE KNUCKLED AT THE TOP AND BOTTOM SELVAGES. FABRIC OVER 5 FT. HIGH SHALL BE TWISTED AND BARBED ON THE TOP SELVAGE AND KNUCKLED ON THE BOTTOM SELVAGE.
12. FENCE MAY BE CONSTRUCTED WITH EITHER ROUND PIPE OR ROLL-FORMED STEEL COMPONENTS. THE CONTRACTOR SHALL STATE AT THE PRECONSTRUCTION CONFERENCE, THE TYPE OF CONSTRUCTION AND TYPE OF LINE POST TO BE USED THROUGHOUT THE PROJECT.
13. THE CONTRACTOR SHALL BE RESPONSIBLE FOR RE-ESTABLISHING DISTURBED OR DESTROYED SURVEY MONUMENTS TO THE APPROPRIATE ACCURACY IN ACCORDANCE WITH SUBSECTION 625.08 OF THE STANDARD SPECIFICATIONS.

SGM
118 West Sixth Street, Suite 200
Glenwood Springs, CO 81601
970.945.1004
www.sgm-inc.com

Clifton Water District

Desert Road Pump Station

#	Revision	Date	By
1	Revised Detail 2	02.23.26	SF
2			
3			

Project Milestone: FOR BID

Job No.	2025-354.02
Drawn by:	SK
Date:	07/23/2026
QC:	BB PE: BB
File:	DRPS-Admin

Title: CIVIL DETAILS

Dwg No. C4

I:\2025\2025-354-CliftonWaterOnCallEngin\02-Desert Rd Pump Station\H-Dwgs\Civil\PS-SheetSet\DRPS-Admin.dwg Plotted: 7/23/2026 4:15 PM By: Sarah Kothlow

GENERAL STRUCTURAL NOTES:

Design Criteria:

Code Edition: 2024 IBC (International Building Code)

Loads used in design are as follows:

Dead Loads			
	Truss Framed Roofs		
	Top Chord	10 psf	
	Bottom Chord	10 psf	
Floor Live Loads			
	Equipment Storage Areas	125 psf	
Snow Loads	Elevation	4763.4 ASL	
	Ground Snow Load	30 psf	
	Flat Roof Snow Load	30 psf	
	Snow Exposure Factor, Ce	1.00	
	Snow Load Importance Factor, Is	1.00	
	Thermal Factor, Ct	1.00	
Wind Design Data			
	Analysis Procedure	ASCE7 Envelope	
	Wind Speed, V	104 mph	
	Risk Category	II	
	Wind Exposure	C	
	Internal Pressure Coefficient	+- 0.18	
	Exterior Component and Cladding Wind Pressures, (ASD Allowable Stress Design Pressures)		
	Roof - 8:12 pitch		
	zone 1 roof, < 10 sq. ft.	+16 psf	-32 psf
	zone 2 roof, < 10 sq. ft.	+16 psf	-36 psf
	zone 3 roof, < 10 sq. ft.	+16 psf	-46 psf
	overhang, zone 1 < 10 sq. ft.	-51 psf	-51 psf
	overhang, zone 2 < 10 sq. ft.	-55 psf	-55 psf
	overhang, zone 3 < 10 sq. ft.	-71 psf	-71 psf
Seismic Design Data			
	Analysis Procedure	ASCE7 Equivalent Lateral Force Procedure	
	Ss	0.21	
	S1	0.046	
	Site Class	D	
	Sds	0.18	
	Sd1	0.07	
	Seismic Design Category	B	
	Seismic Force Resisting System(s)		
	Basic Seismic Force Resisting System 1	ORDINARY WOOD SHEAR WALLS	
	Design Base Shear	V = 0.256 x W	
	Seismic Response Coefficient, Cs	0.256	
	Response Modification Coefficient, R	2	
Geotechnical Design Data			
	Allowable Soil Bearing Pressure	1500 psf	
	Frost Depth	24 inches	
	Active Lateral Pressure	45 psf	
	At Rest Lateral Pressure	65 psf	

Geotechnical Information:

1 The foundation design was prepared in accordance with the geotechnical report by Huddleston-Berry Engineering & Testing, LLC, dated 2/11/2026, project # 0509-0025. The monolithic slab on grade foundation was designed for an allowable bearing pressure of 1500 psf. Foundation shall bear on compacted fill per geotech report 24 inches below adjacent finished grade, unless noted otherwise. Subsurface drainage, excavation, backfilling, surface drainage, and compaction shall be done in accordance with the recommendations in the report. A representative of the soils engineer shall verify the soil conditions and allowable soil bearing pressure at the time of excavation.

2 Foundations subject to frost should be at least 24" below the finished grade.

Reinforcing Steel:

1 All reinforcement detailing, fabrication and placement shall conform to the ACI Details and Detailing of Reinforcement (ACI 315).
2 Unless noted otherwise, all reinforcing bars shall be of deformed bars conforming to ASTM A615, Grade 60.
3 Welded wire fabric shall conform to ASTM A185, Grade 60 and be lapped a minimum of one full mesh plus two inches at side and end splices and be wired together.
4 Reinforcement shall be the longest lengths practical. Where splices are necessary, lap splices shall be as scheduled on drawings, unless noted otherwise. Do not weld or use mechanical splicing.
5 At corners make bar continuous through discontinuity or provide corner bars with a full length lap splice each side of corner.

Reinforced Concrete:

1 All structural concrete has been designed in accordance with ACI 318. All structural concrete construction work shall conform to ACI 301 unless noted otherwise.
2 Cast in place concrete shall be made with Type II or V (ASTM C150) or Type IL (MS) (ASTM C595) cement. Admixtures containing chloride salts shall not be used. All concrete walls and slabs exposed to the weather or earth above frost depth shall have 6% (+/-1.5%) of entrained air. Concrete shall have minimum 28 day compressive strengths of:

Element:	Minimum Compressive Strength, f'c (psi)
Interior equipment pads or curbs:	3500 psi
Foundation walls, foundation slabs, footings:	4500 psi
Exterior slabs and steps exposed to the weather:	4500 psi

3 Concrete coverage for reinforcing steel shall provide the following:

Unformed surfaces poured permanently against earth:	3 inches
Formed surfaces exposed to earth or weather:	
#5 bar or less:	1 1/2 inches
#6 bar or greater:	2 inches
Not exposed to earth, weather, or fluid:	
Slabs and walls, interior face:	1.5 inch
Beam and columns	1 1/2 inches

4 Hot and cold weather concreting procedures shall conform to the recommendations in the ACI manual of Concrete Practice.
5 Bolts for beam and column bearing plates shall be set with templates.
6 Contractor shall coordinate all embeds, penetrations, openings, and verify all plan dimensions prior to forming and pouring concrete.
7 Construction joints shall be laid out to minimize the number of construction joints in each individual structure. Construction joints in walls shall not occur close to wall corners or intersections such that the divide additional corner or intersection reinforcement.

Concrete and Masonry Anchors:

1 Anchor bolts are to be ASTM F1554, Grade 36 L type or headed anchor bolts, unless noted otherwise. Embedment shall be a minimum of 16 times anchor diameter unless noted otherwise. Anchor bolts for wood sill plates shall be in the center third of the plate, 12 inches maximum from each end, with a minimum of 2 bolts per plate. Bolts shall be a minimum of 1/2 inch diameter bolts at 48 inches on center with 7 inches minimum embedment into concrete or fully grouted masonry with tightened nuts and washers.
2 Expansion Bolts are to be Kwik Bolt TZ manufactured by Hilti, Inc. Install in accordance with ICC Report ESR-917 or approved update, including standard embedment depths, unless noted otherwise. Proposed substitutions shall have equal or greater capacity and shall be submitted to the engineer for review with product data and code approval reports.
3 Epoxy grouted anchors installed in concrete are to be HIT-Z anchor rods or HAS threaded rods or reinforcing steel installed using HY-200 Adhesive Anchoring System manufactured by Hilti, Inc. Install in accordance with ICC Report ESR-3187 or approved update, including standard embedment depths, unless noted otherwise. Proposed substitutions shall have equal or greater capacity and shall be submitted to the engineer for review with product data and code approval reports.

Wood Framing:

1 Sawn Lumber Framing shall be kiln dried lumber graded and marked in accordance with the following minimum standards unless noted otherwise:

Studs, plates, and miscellaneous framing:	Hem Fir No. 2 or better
Dimensional joists, beams, and headers (2X, 3X, & 4x members):	Hem Fir No. 2 or better
Heavy Timber Beams and Columns (6x and larger members):	Spruce Pine Fir No. 1 or Douglas Fir Larch No. 1
Exposed to weather, moisture, or in direct contact with earth or concrete:	Southern Pine No. 2

2 Manufactured Wood Roof Trusses shall be designed, fabricated, and erected in accordance with ANSI/TPI National Design Standard for Metal Plate Connected Wood Truss Construction. Trusses shall be designed for loads indicated, including unbalanced and drifting snow loads in accordance with the IRC. Truss calculations and shop drawings shall bear the stamp of a Colorado Registered Engineer. Submit calculations and shop drawings to the Engineer for review and approval prior to fabrication. Trusses shall be braced in accordance with accepted industry practice such as SBCA Building Component Safety Information (BCSI) Guide to Good Practice for Handling, Installing, & Bracing of Metal Plate connected Wood Trusses. Vertical and lateral deflection shall be within the limits of the most current version of ANSI/TPI-1. Girder trusses shall be attached to wall framing with Simpson LGT connectors, or equal, unless noted otherwise.
3 All wood framing details not shown otherwise shall be constructed equal to or better than the minimum standards of the 2024 IBC (International Building Code)
4 Unless noted otherwise, minimum nailing shall be in accordance with the Fastening Schedules and Details of the 2024 IBC (International Building Code)
5 Roof and wall sheathing shall be APA rated OSB or plywood for the spans as indicated on the sheathing with glue for exterior application. Unless noted otherwise on plans, details, or schedules, sheathing shall meet the following minimum sizes and attachment requirements:

Roof:	19/32 in. sheathing nailed with 10d Common @ 6" o.c. along panel edges and 12 inches on center in the panel field
Exterior Face of Wall:	Insulated Zip R-6 sheathing nailed with 0.131" Ø shank w/ 1 1/2" penetration into stud @ 6" o.c. along all panel edges to blocking or framing and 12 inches on center in the panel field
Interior Face Shear Wall:	7/16 in. sheathing nailed with 8d @ 6" o.c. along all panel edges to blocking or framing and 12 inches on center in the panel field

6 Roof rafters, trusses, and lookout framing shall be attached to walls and bearing beams with H2.5 hurricane clips for single ply members and with LGT Girder Tiedowns for multi-ply roof trusses and beams unless noted otherwise. Alternatively for single ply members only, Simpson SDWC15600 truss screws or 6" TimberLok screws may be installed from below the double top plate into the truss above. Guide template must be used for installation.
7 Framing connections shall be made with Simpson Strong-Tie connectors and manuracturer supplied or specified fasteners. Connections shall utilize face mount framing connectors for all wood to wood connections and top flange connectors for attachment of wood framing to wood plates on steel or concrete. All steel fasteners, hangers, and plates in contact with pressure treated wood shall be hot dipped galvanized or have other corrosion protection.
8 Wood Nail Fasteners:
Nail sizes specified on the drawings are based on the following minimum specifications:

ID	Nail Name	Diameter	Nail Length
8d	8d Common	0.131"	2 1/2"
10d	10d Common	0.148"	3"
16d	16d Sinker	0.148"	3 1/4"

Alternative nails proposed by the contractor shall be submitted with specifications to the structural engineer prior to construction for reivew and approval.

9 Generic Wood Screw Fasteners:
Screw types specified on the drawings are based on the following minimum specifications:

ID	Screw Name	Diameter	Screw Length
#6 GWB	#6 Type W	0.138"	varies, 5/8" min. penetration into framing
#8	#8 Wood Screw	0.164"	varies, 1 5/8" min. penetration into framing
#10	#10 Wood Screw	0.190"	varies, 2" min. penetration into framing
#12	#12 Wood Screw	0.216"	varies, 2 1/4" min. penetration into framing

Alternative screws proposed by the contractor shall be submitted with specifications to the structural engineer prior to construction for reivew and approval.

10 Manufacturer Specific Wood Screw Fasteners:
Manufacturer specific screw types specified on the drawings are based on screws manufactured by Simpson, Inc. Installation shall be in accordance with all manufacturer's requirements and code approval reports ICC-ES ESR-2236 and IAPMO-UES ER-192. Screws shall be in accordance with the following minimum specifications:

ID	Screw Name	Diameter	Screw Length
SDS	SDS Heavy Duty Connector Screw	0.25"	varies, 2 1/2" min. penetration into framing
SDWH	SDWH Timber-Hex HDG Screw	0.276"	varies, 5" min. penetration into framing
SDWS	SDWS Timber Screw	0.219"	varies, 2 1/2" min. penetration into framing

Alternative screws proposed by the contractor shall be submitted with specifications to the structural engineer prior to construction for reivew and approval.

General Requirements:

1 Structural erection and bracing: The structural drawings illustrate the completed structure with all elements in their final positions supported and braced. The contractor, in the proper sequence, shall provide shoring and bracing as may be required during construction to achieve the final completed structure. Contact engineer for consultation (not in contract) as required.
2 Shop drawings: Submit shop and erection drawings for all concrete mixes and concrete reinforcement to engineer to review prior to fabrication. This review is for general compliance with the intent of the structural design. The manufacturing or fabrication of any items prior to written review of the shop drawings will be at the risk of the contractor. The contractor is responsible for checking quantities, dimensions and coordination with other trades.
3 Dimensions: Check all dimensions against field conditions prior to construction. Do not scale drawings.
4 Construction practices: The general contractor is responsible for means, methods, techniques, sequences and procedures for construction of this project. Notify structural engineer of omissions or conflicts between the working drawings and existing conditions.
5 Coordinate requirements for mechanical/electrical/plumbing penetrations through structural elements with structural engineer. Prior to installation of such equipment or other items to be attached to the structure, the contractor shall obtain approval for connections and support. Contractor shall furnish required hangers, connections, etc. required for installation of such items, unless specifically noted on plans.
6 Jobsite safety is the sole responsibility of the contractor. All methods used for construction shall be in accordance with the latest edition of the IBC.
7 The structural engineer may make periodic observation visits to the jobsite for determination of general conformance with the construction documents. Such observation visits shall not replace required inspections by the governing authorities or serve as "special inspections" as may be required by the International Building Code.
8 Though every effort has been made to provide a complete and clear set of construction documents, discrepancies or omissions may occur. Release of these drawings anticipates cooperation and continued communication between the contractor, architect and engineer to provide the best possible structure. These drawings have been prepared for the use of a qualified contractor experienced in the construction techniques and systems depicted.

SYMBOLS LEGEND

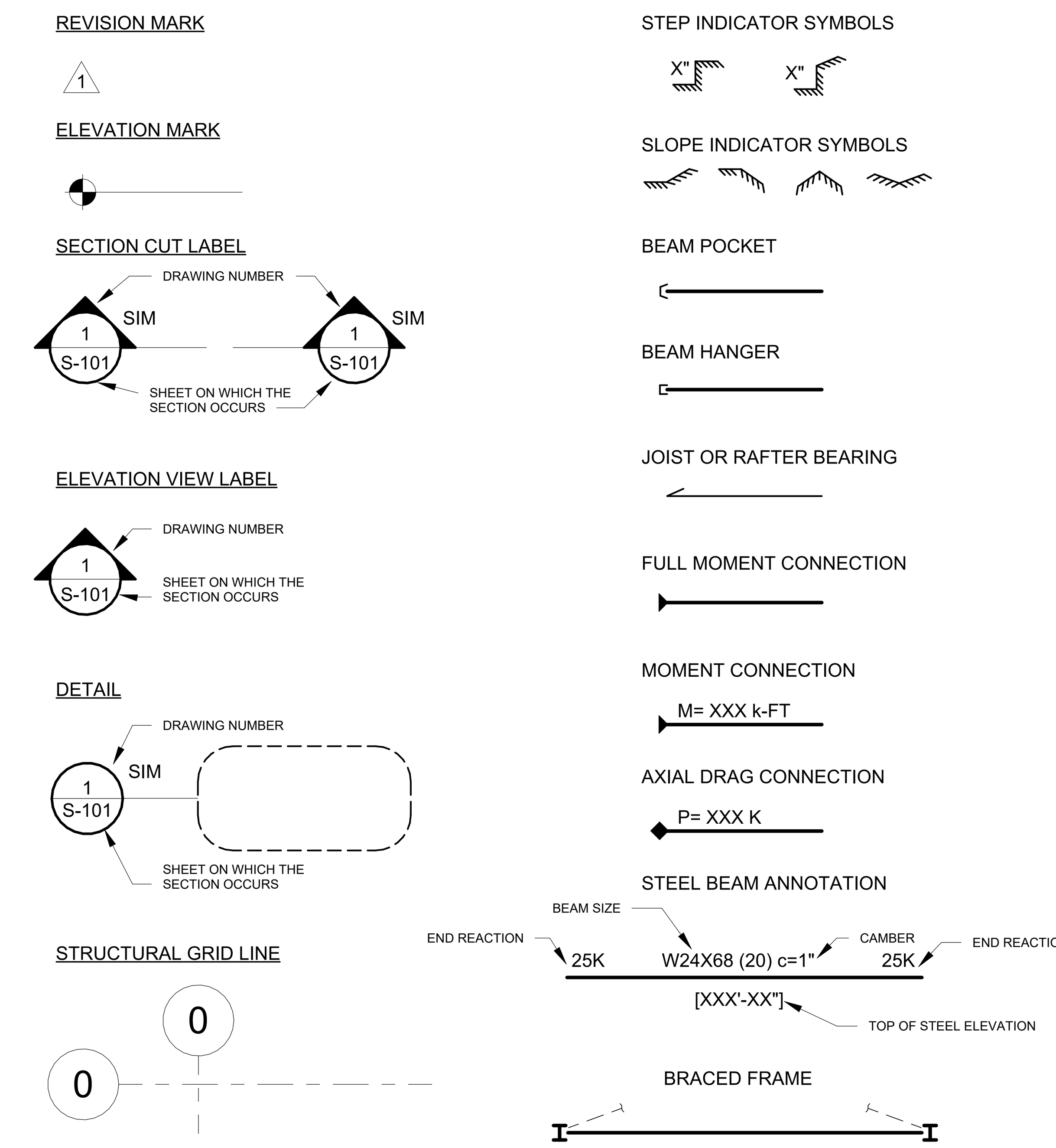

MATERIALS LEGEND

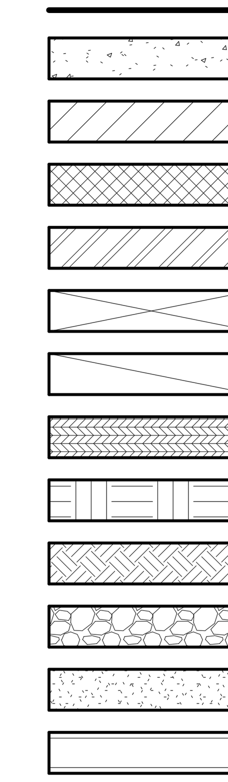

SGM
118 West Sixth Street, Suite 200
Glenwood Springs, CO 81601
970.945.1004
www.sgm-inc.com

Desert Road Pump Station
PARCEL #2969-303-00-333
GRAND JUNCTION, CO 81501

#	Revision	Date	By:

Project Milestone: FOR BID

Job No.	2025-354.001 PH 02
Drawn by:	WZJ
Date:	07.27.2026
QC: MAN	PE: MAN
File:	R25

Title: GENERAL NOTES

Dwg No. S1

I:\2025\2025-354-CliftonWaterOnCallEngin\02-Desert Rd Pump Station\H-Dwgs\Struc\Revit Model\[DesertRdPumpStation_STRUCT_R25.rvt
Plotted: 7/28/2026 5:09:57 PM Central Model:

STATEMENT OF SPECIAL INSPECTIONS

This Statement of Special Inspections is prepared in accordance with the 2024 International Building Code Section 1704.3. It is limited to structural elements and does not include requirements for architectural components, plumbing, mechanical, and electrical components, fire resistant materials, insulation systems and smoke control systems as outlined in IBC Sections 1705.15, 1705.16, 1705.18, 1705.19, and 1705.20. Additional Statements may be required from other Design Professionals.

Sections noted shall be inspected or tested in accordance with the referenced standards or IBC reference. See IBC for appropriate references.

Inspections and testing shall be performed by the Jurisdiction Building Official or by an approved agency engaged by the owner or owner's representative and recognized and approved by the Building Official in accordance with IBC Section 1704.

REQUIRED SPECIAL INSPECTIONS AND TESTS OF CONCRETE CONSTRUCTION

TYPE	CONTINUOUS DURING TASK LISTED	PERIODICALLY DURING TASK LISTED	REFERENCED STANDARDa	IBC REFERENCE
1. Inspect reinforcement, including prestressing tendons, and verify placement.	—	X	ACI 318: Ch. 20, 25.2, 25.3, 26.6.1-26.6.3	—
2. Reinforcing bar welding:				
a. Verify weldability of reinforcing bars other than ASTM A706			AWS D1.4 ACI 318: 26.13.1.4	—
b. Inspect single-pass fillet welds, maximum 5/16"; and	—	X		
c. Inspect all other welds	X	X		
3. Inspect anchors cast in concrete.	—	X	ACI 318: 26.13.3.3	—
4. Inspect anchors post-installed in hardened concrete members.b				
a. Adhesive anchors installed in horizontally or upwardly inclined orientations to resist sustained tension loads.	X	—	ACI 318: 26.13.3.2	—
b. Mechanical anchors and adhesive anchors not defined in 4.a	—	X	ACI 318: 26.13.3	
5. Verify use of required design mix.	—	X	ACI 318: Ch. 19, 26.4.3, 26.4.4	1904.1, 1904.2
6. Prior to concrete placement, fabricate specimens for strength tests, perform slump and air content tests, and determine the temperature of the concrete.	X	—	ASTM C31 ASTM C172 ACI 318: 26.5, 26.12	—
7. Inspect concrete and shotcrete placement for proper application techniques.	X	—	ACI 318: 26.5	—
8. Verify maintenance of specified curing temperature and techniques.	—	X	ACI 318: 26.5.3-26.5.5	—
9. Inspect prestressed concrete for:				
a. Application of prestressing forces; and	X	—	ACI 318: 26.10	—
b. Grouting of bonded prestressing tendons.	X	—		
10. Inspect erection of precast concrete members.	—	X	ACI 318: Ch. 26.9	—
11. For precast concrete diaphragm connections or reinforcement at joints classified as moderate or high deformability elements (MDE or HDE) in structures assigned to Seismic Design Category C, D, E, or F, inspect such connections and reinforcement in the field for:				
a. Installation of the embedded parts	X	—	ACI 318: 26.13.1.3 ACI 550.5	—
b. Completion of the continuity of reinforcement across joints.	X	—		
c. Completion of connections in the field.	X	—		
12. Inspect installation tolerances of precast concrete diaphragm connections for compliance with ACI 550.5.	—	X	ACI 318: 26.13.1.3	—
13. Verify in-situ concrete strength, prior to stressing of tendons in post-tensioned concrete and prior to removal of shores and forms from beams and structural slabs.	—	X	ACI 318: 26.11.2	—
14. Inspect formwork for shape, location and dimensions of the concrete member being formed.	—	X	ACI 318: 26.11.1.2(b)	—

For SI: 1 inch = 25.4 mm
a. Where applicable, see also Section 1705.13, Special Inspections for seismic resistance.
b. Specific requirements for special inspection shall be included in the research report for the anchor issued by an approved source in accordance with 17.8.2 in ACI 318, or other qualification procedures. Where specific requirements are not provided, special inspection requirements shall be specified by the registered design professional and shall be approved by the building official prior to the commencement of the work.

Table 1705.6

REQUIRED SPECIAL INSPECTIONS AND TESTS OF SOILS

TYPE	CONTINUOUS SPECIAL INSPECTION	PERIODIC SPECIAL INSPECTION
1. Verify materials below shallow foundations are adequate to achieve the design bearing capacity.	-	X
2. Verify excavations are extended to proper depth and have reached proper material.	-	X
3. Perform classification and testing of compacted fill materials.	-	X
4. Verify use of proper materials, densities and lift thicknesses during placement and compaction of compacted fill.	X	-
5. Prior to placement of compacted fill, observe subgrade and verify that site has been prepared properly.	-	X

SGM
118 West Sixth Street, Suite 200
Glenwood Springs, CO 81601
970.945.1004
www.sgm-inc.com

Desert Road Pump Station
PARCEL #2969-303-00-333
GRAND JUNCTION, CO 81501

#	Revision	Date	By:

Project Milestone: FOR BID

Job No. 2025-354.001 PH 02
Drawn by: WZJ
Date: 07.27.2026
QC: MAN | PE: MAN
File: R25

Title: SPECIAL INSPECTIONS

Dwg No. S2

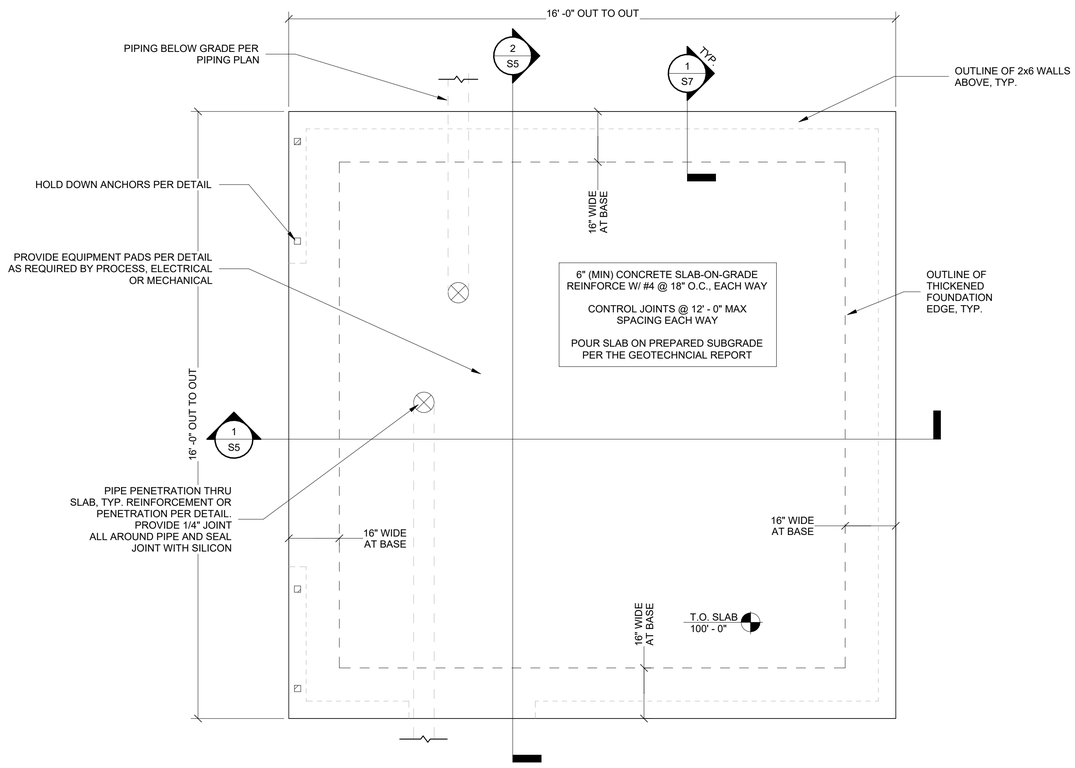

1 / S3 FOUNDATION PLAN
1/2" = 1'-0"

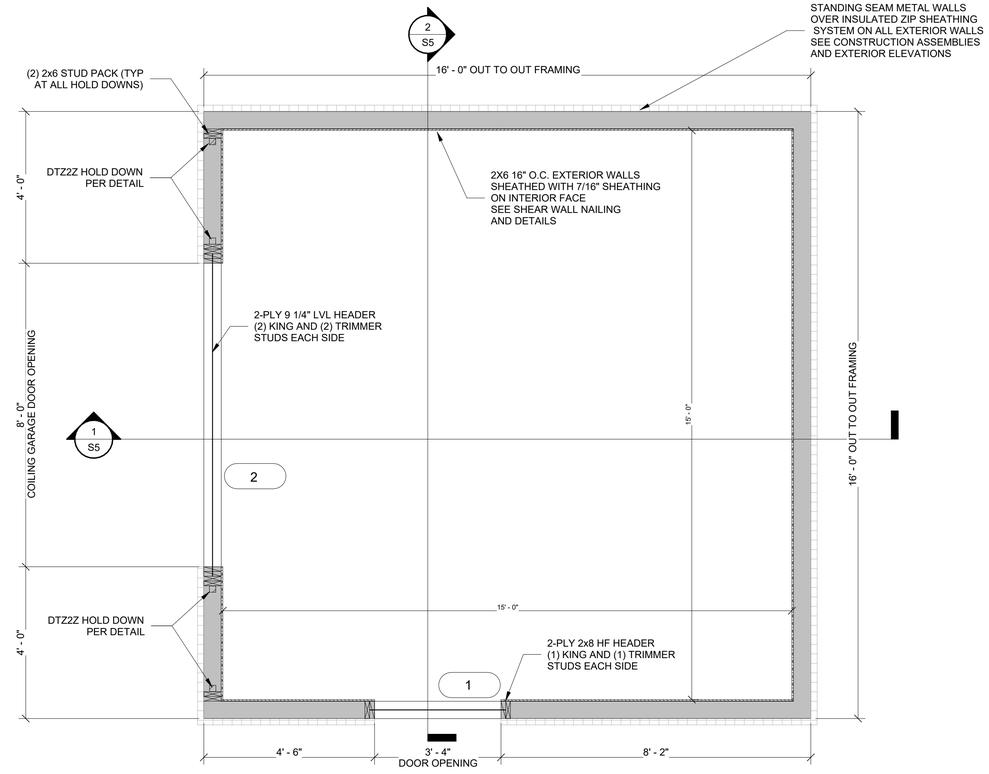

3 / S3 WALL FRAMING PLAN
1/2" = 1'-0"

DOOR SCHEDULE					
MARK	WIDTH	HEIGHT	THICKNESS	FINISH	COMMENTS
1	3' - 0"	7' - 0"	1 3/4"	PAINT	ENTRY LOCKSET PER OWNER
2	8' - 0"	8' - 0"	1 3/4"	PREFINISHED	MANUAL OPERATION, LOCKSET PER OWNER

** ALL DOORS INSULATED PER IECC

SGM
118 West Sixth Street, Suite 200
Glenwood Springs, CO 81601
970.945.1004
www.sgm-inc.com

Desert Road Pump Station
PARCEL #2969-303-00-333
GRAND JUNCTION, CO 81501

#	Revision	Date	By:

Project Milestone: FOR BID

Job No.	2025-354.001 PH 02
Drawn by:	WZJ
Date:	07.27.2026
QC: MAN	PE: MAN
File:	R25

Title: FOUNDATION & FRAMING PLANS

Dwg No. S3

Plotted: 7/28/2026 5:09:59 PM Central Mode
I:\2025\2025-354 Clifton\WaterOnCall\Engin\02-Desert Rd Pump Station\+Dwgs\Struc\Revit Model\[Desert\RdPumpStation_STRUCT_R25.rvt

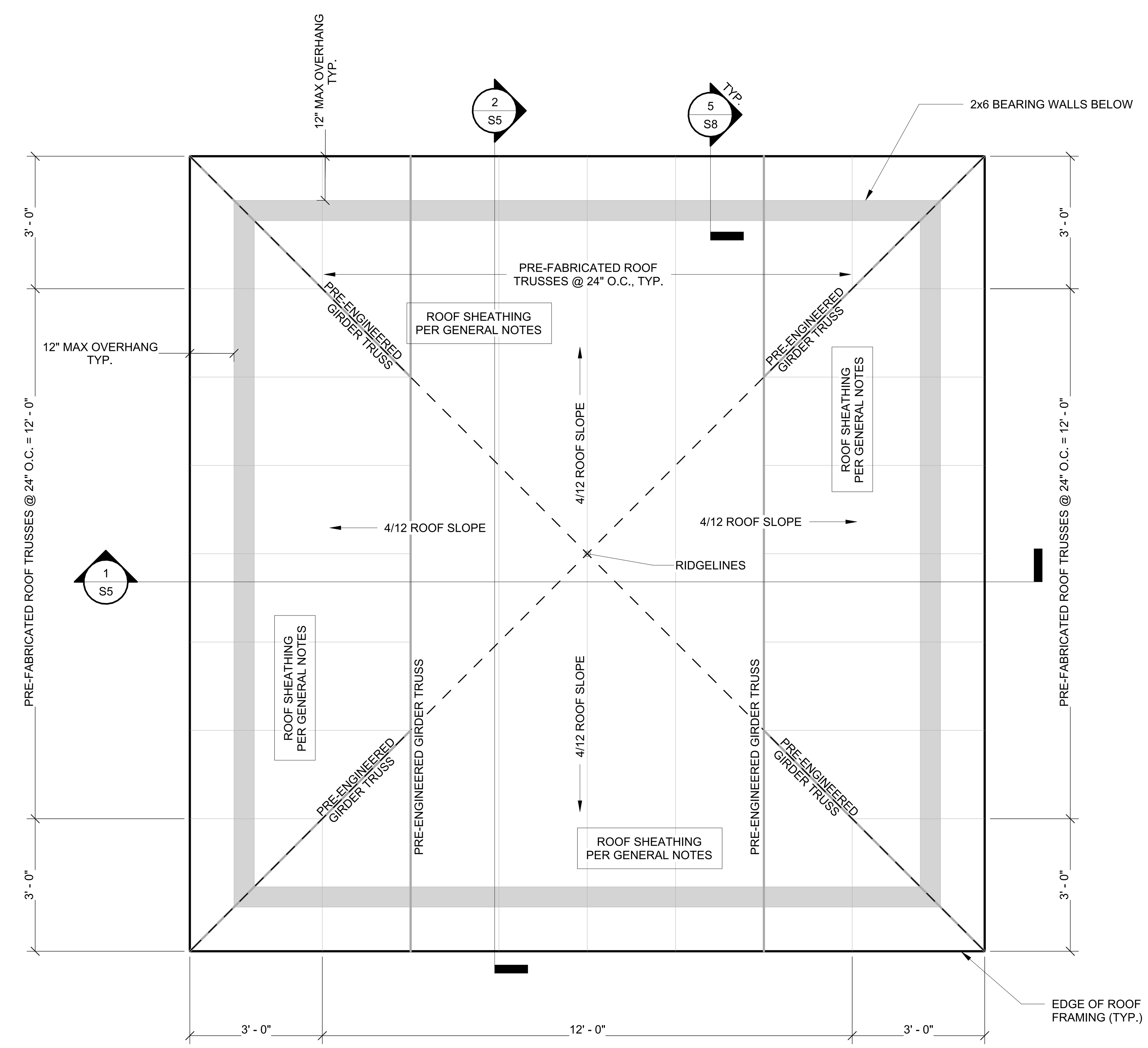

1 / S4 — ROOF FRAMING PLAN
1/2" = 1'-0"

SGM
118 West Sixth Street, Suite 200
Glenwood Springs, CO 81601
970.945.1004
www.sgm-inc.com

Desert Road Pump Station
PARCEL #2969-303-00-333
GRAND JUNCTION, CO 81501

#	Revision	Date	By:

Project Milestone: FOR BID

Job No.	2025-354.001 PH 02
Drawn by:	WZJ
Date:	07.27.2026
QC: MAN	PE: MAN
File:	R25

Title:
ROOF PLAN

Dwg No.
S4

Plotted: 7/28/2026 5:10:00 PM Central Model:
I:\2025\2025-354-CliftonWaterOnCallEngin\02-Desert Rd Pump Station\H-Dwgs\Struc\Revit Model\[DesertRdPumpStation_STRUCT_R25.rvt

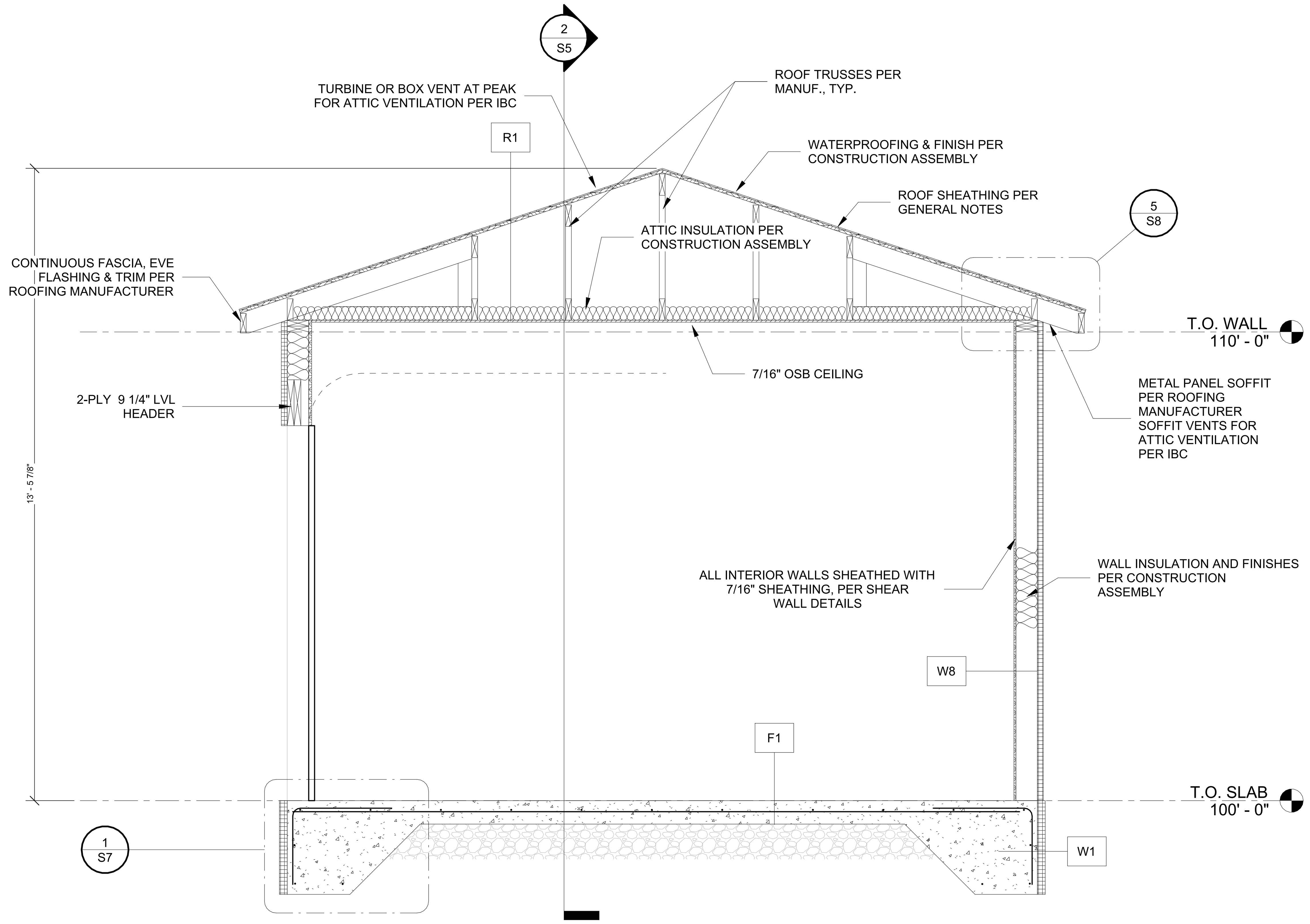

1
S5
BUILDING SECTION 1
1/2" = 1'-0"

CONSTRUCTION ASSEMBLIES:

W1	FOUNDATION BELOW GRADE - XPS TYPE IV RIGID INSULATION PER IECC [R-7.5] - CONCRETE FOUNDATION PER FOUNDATION PLAN
W8	EXTERIOR WOOD FRAMED WALL - STANDING SEAM METAL WALL PANELS PER EXTERIOR ELEVATIONS - INSULATED ZIP SHEATHING [R-6] PER WALL FRAMING PLAN - 2x6 WALL PER WALL PLAN - BATT INSULATION IN WALL FRAMING [R-20] - 7/16 OSB SHEATHING ON INTERIOR WALLS PER WALL FRAMING PLAN, PAINTED
F1	FLOOR CONSTRUCTION - CONCRETE FLOOR SEALANT, CLEAR - CONCRETE SLAB PER FOUNDATION PLAN - PREPARED SUBGRADE PER GEOTECH
R1	ROOF CONSTRUCTION - STANDING SEAM METAL ROOF PER EXTERIOR ELEVATIONS - ROOF UNDERLAYMENT, ICE & WATER SHIELD OVER EAVES PER IBC - OSB ROOF SHEATHING PER GENERAL NOTES - ENGINEERED TRUSS ROOF MEMBERS PER ROOF FRAMING PLAN - BLOWN IN FIBERGLASS ATTIC INSULATION PER IECC [R-49] - 7/16" OSB CEILING FINISH, PAINTED

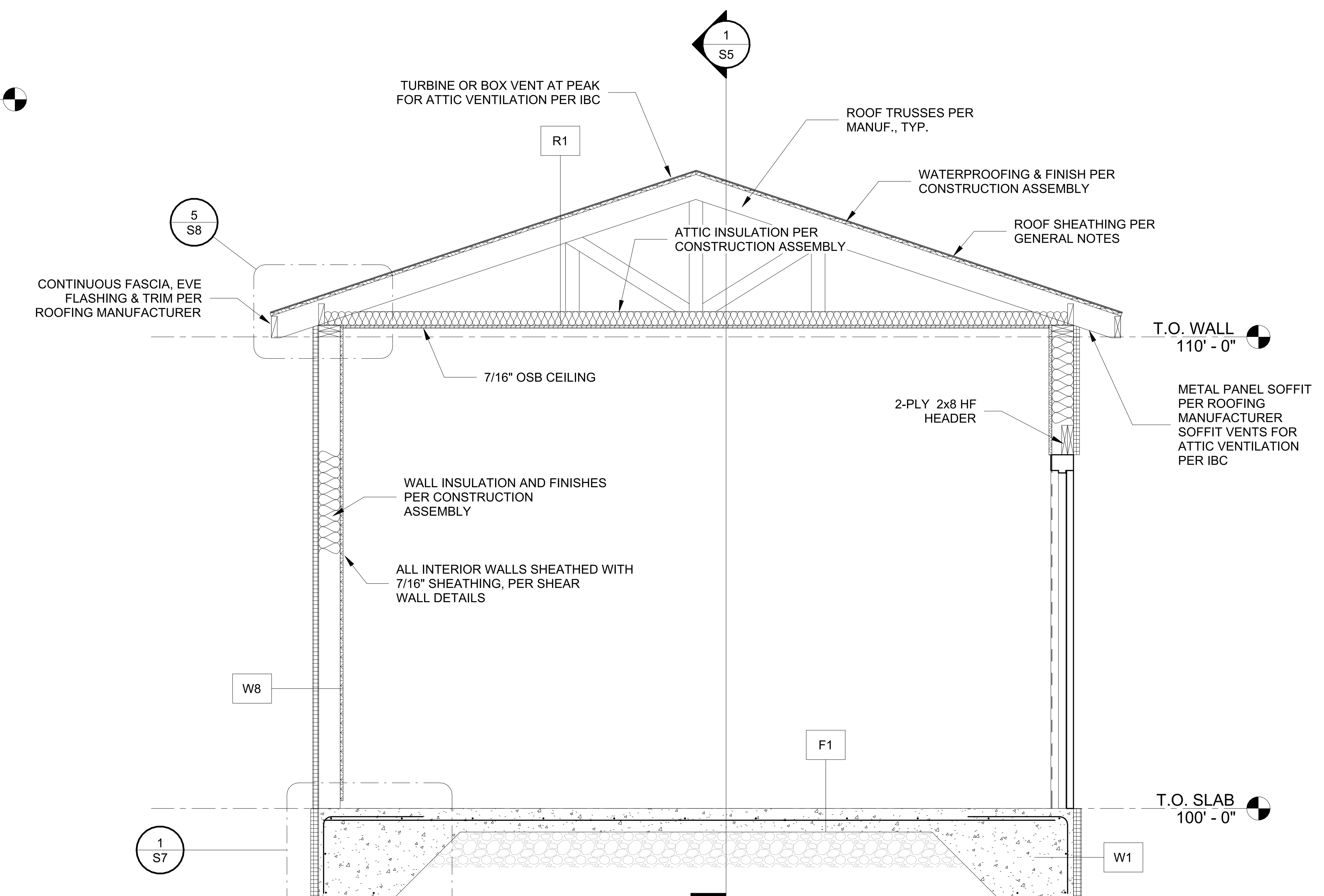

SECTION NOTES:

1. ELEVATION 100' - 0" = 4763.40'. VERIFY WITH CIVIL SITE PLAN.
2. ## INDICATES CONSTRUCTION ASSEMBLY MARK #. SEE CONSTRUCTION ASSEMBLY LEGEND THIS SHEET.

2
S5
BUILDING SECTION 2
1/2" = 1'-0"

SGM
118 West Sixth Street, Suite 200
Glenwood Springs, CO 81601
970.945.1004
www.sgm-inc.com

Desert Road Pump Station
PARCEL #2969-303-00-333
GRAND JUNCTION, CO 81501

#	Revision	Date	By:

Project Milestone: FOR BID

Job No.	2025-354.001 PH 02
Drawn by:	WZJ
Date:	07.27.2026
QC: MAN	PE: MAN
File:	R25

Title:

SECTIONS

Dwg No.

S5

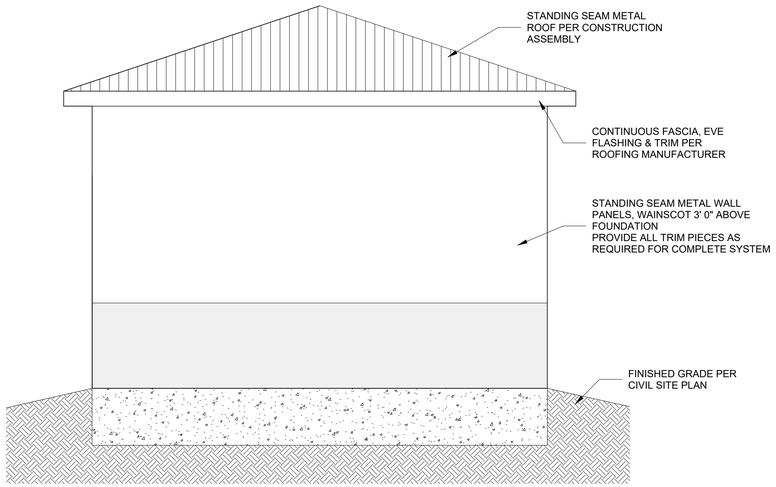

1 / S6 EAST
3/8" = 1'-0"

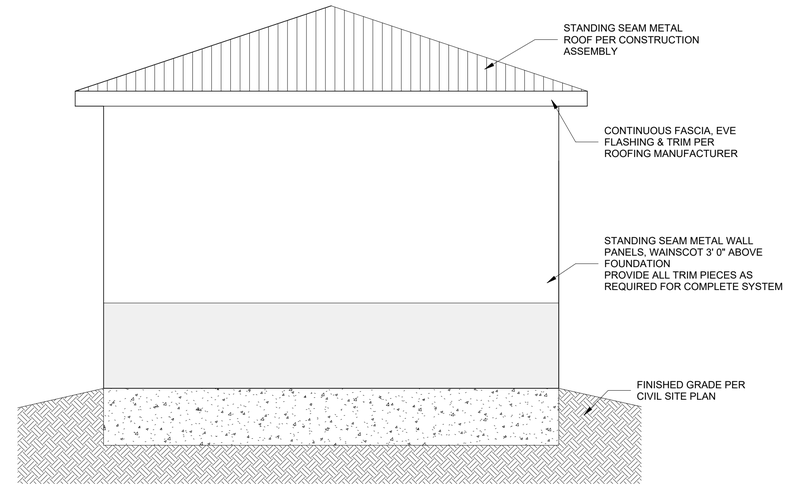

2 / S6 NORTH
3/8" = 1'-0"

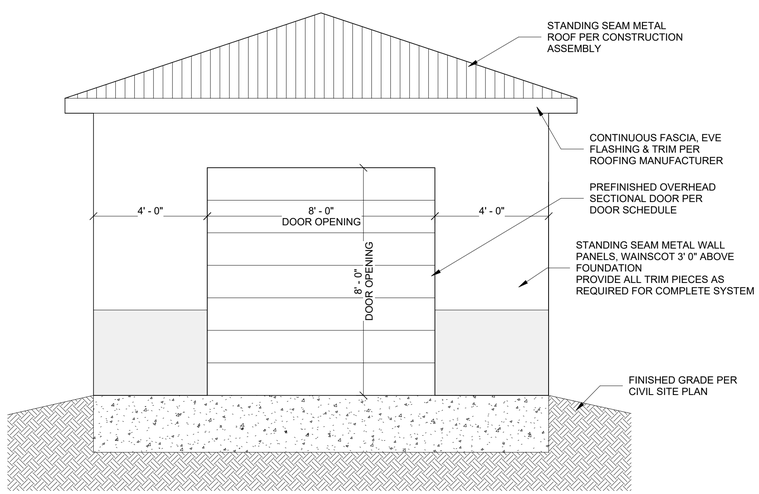

4 / S6 WEST
3/8" = 1'-0"

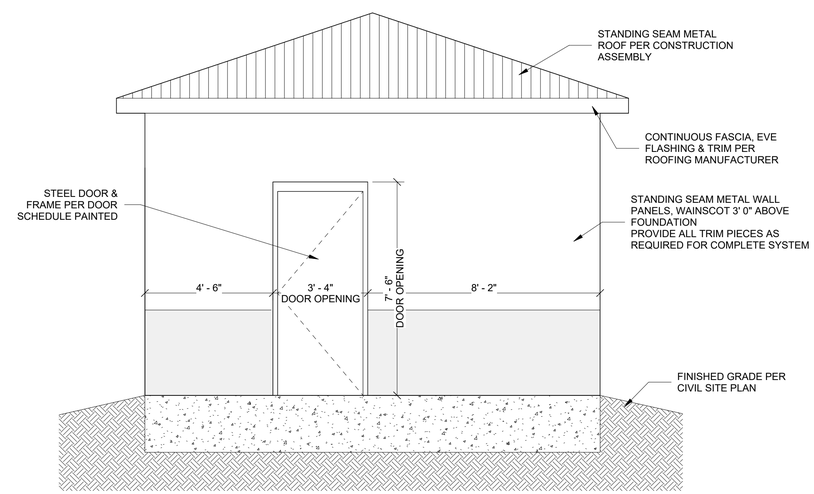

3 / S6 SOUTH
3/8" = 1'-0"

EXTERIOR ELEVATION NOTES:

1. ALL COLORS SHALL BE SELECTED BY OWNER FROM MANUFACTURERS STANDARD COLOR SELECTION

SGM
118 West Sixth Street, Suite 200
Glenwood Springs, CO 81601
970.945.1004
www.sgm-inc.com

Desert Road Pump Station
PARCEL #2969-303-00-333
GRAND JUNCTION, CO 81501

#	Revision	Date	By:

Project Milestone: FOR BID

Job No.	2025-354.001 PH 02
Drawn by:	WZJ
Date:	07.27.2026
QC: MAN	PE: MAN
File:	R25

Title:
ELEVATIONS

Dwg No.
S6

Plotted: 7/28/2026 5:10:02 PM Central Model:
I:\2025\2025-354 Clifton Water On Call\Engr\02-Desert Rd Pump Station\Work\Design\Struc\Revit Model\DesertRdPumpStation_STRUCT_R25.rvt

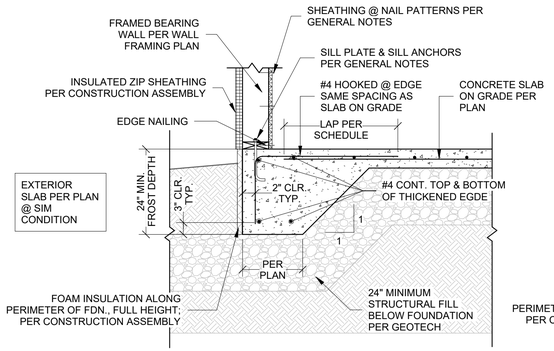

1 / S7 THICKENED SLAB EDGE - FOAM INSULATED
3/4" = 1'-0"

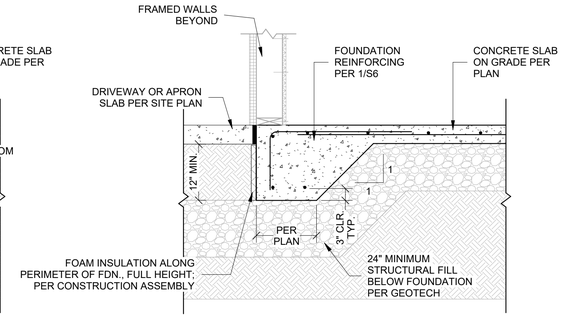

2 / S7 THICKENED SLAB EDGE - FOAM INSULATED @ GARAGE DOOR
3/4" = 1'-0"

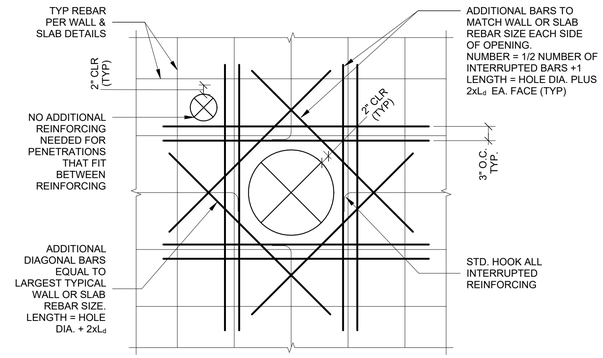

5 / S7 TYPICAL WALL & SLAB ROUND PENETRATION DETAIL IN NEW CONCRETE
3/4" = 1'-0"

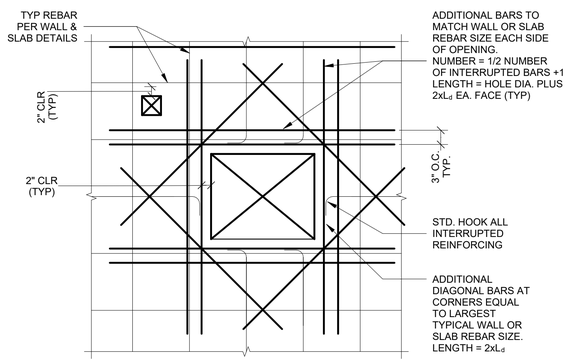

6 / S7 TYPICAL WALL & SLAB RECTANGULAR PENETRATION DETAIL IN NEW CONCRETE
3/4" = 1'-0"

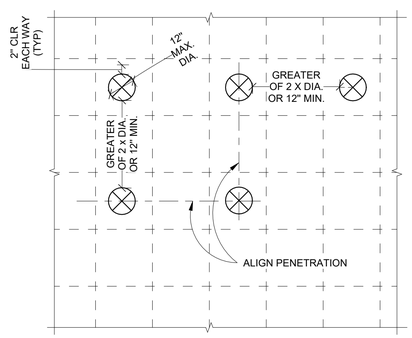

7 / S7 TYPICAL SMALL PENETRATIONS
3/4" = 1'-0"

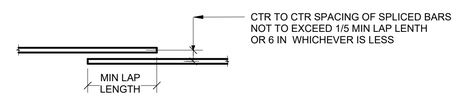

12 / S7 REINFORCING LAP SPLICE
3/4" = 1'-0"

10 / S7 TIE OR STIRRUP BENDS AND ENDS
3/4" = 1'-0"

9 / S7 MAX REINFORCING OFFSET BEND
3/4" = 1'-0"

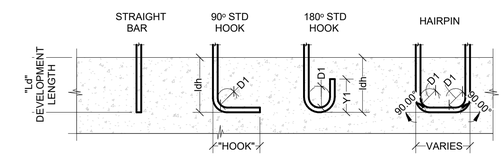

11 / S7 PRIMARY REINFORCING HOOKS AND EMBEDMENT
3/4" = 1'-0"

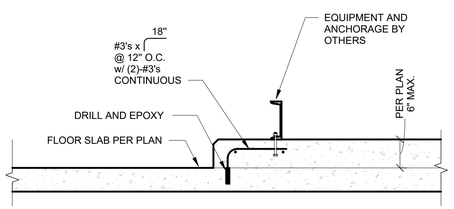

8 / S7 TYPICAL EQUIPMENT PAD
3/4" = 1'-0"

REINFORCING HOOKS AND SPLICE TABLE (F'C = 4500 PSI, Fy=60 KSI, BAR SPACING = 6 IN. MIN.)									
BAR SIZE	DIAMETER $(d)_b$ (INCHES)	DEVELOPMENT LENGTH (L_d) (INCHES)		CLASS B LAP SPLICE (INCHES)		90° STD HOOK (INCHES)		180° STD HOOK (Y1) (INCHES)	INSIDE BEND DIA.(D1) (INCHES)
		"TOP" BARS	OTHER	"TOP" BARS	OTHER	HOOK	L_{dh}		
		REINFORCING BARS IN TENSION							
#3	0.375	18	14	24	19	6	7	4	2.25
#4	0.5	24	18	32	24	8	9	5	3
#5	0.625	30	23	39	30	10	11	5	3.75
#6	0.75	35	27	46	36	12	13	6	4.5
#7	0.875	51	40	67	52	14	16	7	5.25
#8	1	59	45	77	59	16	18	8	6
#9	1.125	66	51	86	67	20	20	11	9
#10	1.25	73	56	95	73	22	22	12	10
#11	1.375	80	62	104	81	24	25	13	11
#14	1.75	102	79	133	103	32	31	18	17.5
#18	2.25	131	101	171	132	41	40	23	22.5

STIRRUP AND TIE HOOK SCHEDULE					
BAR SIZE	DIAMETER (d_b) (INCHES)	90° HOOK (INCHES)	135° HOOK (INCHES)	180° HOOK (Y2) (INCHES)	INSIDE HOOK DIA.(D2) (INCHES)
#3	0.375	5	5	4	1.5
#4	0.5	5	5	4	2
#5	0.625	6	6	5	2.5
#6	0.75	12	8	6	4.5
#7	0.875	14	9	7	5.25
#8	1	16	10	8	6

NOTES:
1. "TOP" BARS SHALL BE HORIZONTAL REINFORCEMENT PLACED SO THAT MORE THAN 12" OF FRESH CONCRETE IS CAST IN THE MEMBER BELOW THE DEVELOPMENT LENGTH OR SPLICE.
2. CLEAR SPACING OF BARS BEING DEVELOPED OR SPLICED SHALL
   A) NOT BE LESS THAN d/b, HAVE CLEAR COVER NOT LESS THAN d/b, AND STIRRUPS OR TIES THROUGHOUT L/d NOT LESS THAN THE CODE MINIMUM OR;
   B) CLEAR SPACING OF BARS BEING DEVELOPED OR SPLICED NOT LESS THAN 2d/b AND CLEAR COVER NOT LESS THAN d/b.
   WHERE d/b = DIAMETER OF REINFORCING BAR AND
   L/d = DEVELOPMENT LENGTH.
3. ALL LAP SPLICES SHALL BE CLASS B UNLESS NOTED OTHERWISE.
4. WHEN SPLICING BAR OF DIFFERENT SIZE, THE LENGTH OF LAP SHALL BE GOVERNED BY THE LARGER DIAMETER BAR.
5. SPLICES ARE TO BE MADE SO THAT THE GIVEN DISTANCES TO FACE OF CONCRETE WILL BE MAINTAINED.
6. SPLICES SHALL BE STAGGERED TO GIVE 12 INCHES CLEAR BETWEEN ENDS OF ADJACENT SPLICES, IF BARS ARE SPACED CLOSER THAN 6 INCHES OR 6 BAR DIAMETERS.

13 / S7 STANDARD REINFORCING HOOKS AND SPLICE SCHEDULES
3/4" = 1'-0"

SGM
118 West Sixth Street, Suite 200
Glenwood Springs, CO 81601
970.945.1004
www.sgm-inc.com

Desert Road Pump Station
PARCEL #2969-303-00-333
GRAND JUNCTION, CO 81501

#	Revision	Date	By:

Project Milestone: FOR BID

Job No.	2025-354.001 PH 02
Drawn by:	WZJ
Date:	07.27.2026
QC: MAN	PE: MAN
File:	R25

Title: DETAILS

Dwg No. S7

Plotted: 7/28/2026 5:10:03 PM Central Mode
I:\2025\2025-354-Clifton\WaterOnCall\Engin\02-Desert Rd Pump Station\1-Dwgs\Struc\Revit Model\[DesertRdPumpStation_STRUCT_R25.rvt

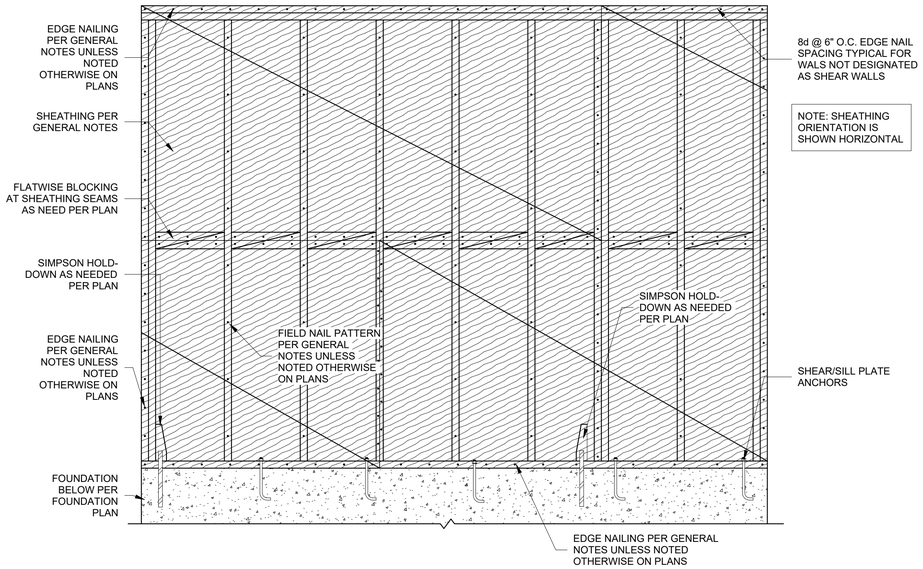

1 / S8 TYPICAL SHEAR WALL ELEVATION
3/4" = 1'-0"

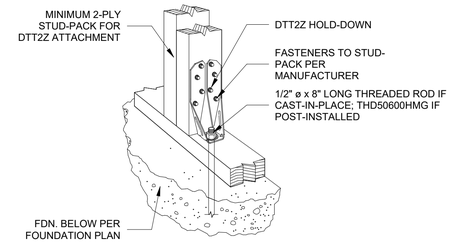

2 / S8 DTT2Z DETAIL
3/4" = 1'-0"

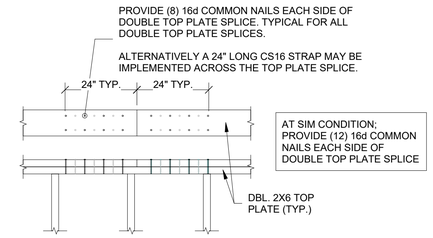

3 / S8 TYPICAL DOUBLE TOP PLATE SPLICE DETAIL
3/4" = 1'-0"

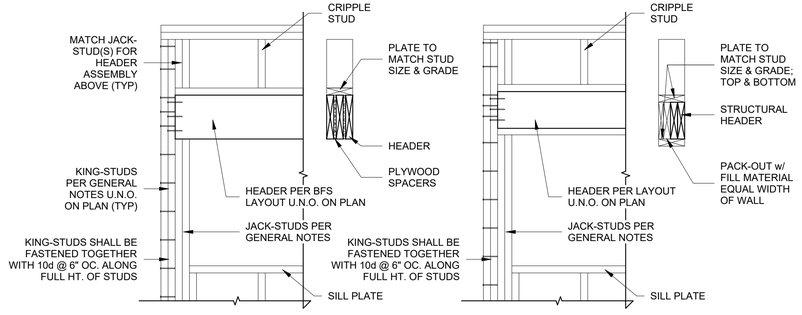

4 / S8 TYPICAL HEADER OVER OPENING
3/4" = 1'-0"

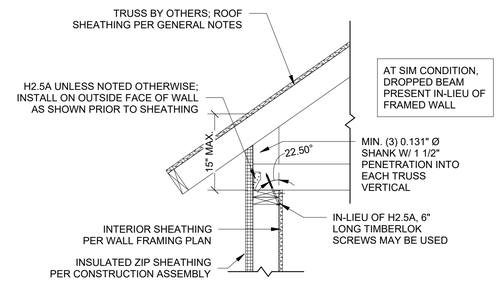

5 / S8 TYPICAL EXTERIOR TRUSS BEARING DETAIL
3/4" = 1'-0"

SGM
118 West Sixth Street, Suite 200
Glenwood Springs, CO 81601
970.945.1004
www.sgm-inc.com

Desert Road Pump Station
PARCEL #2969-303-00-333
GRAND JUNCTION, CO 81501

#	Revision	Date	By

Project Milestone: FOR BID

Job No.	2025-354.001 PH 02
Drawn by:	WZJ
Date:	07.27.2026
QC: MAN	PE: MAN
File:	R25

Title: DETAILS

Dwg No. S8

Plotted: 7/28/2026 5:10:04 PM Central Mode
I:\2025\2025-354-Clifton\WaterOnCall\Engin\02-Desert Rd Pump Station\+Dwgs\Struc\Revit Model\[Desert\RdPumpStation_STRUCT_R25.rvt

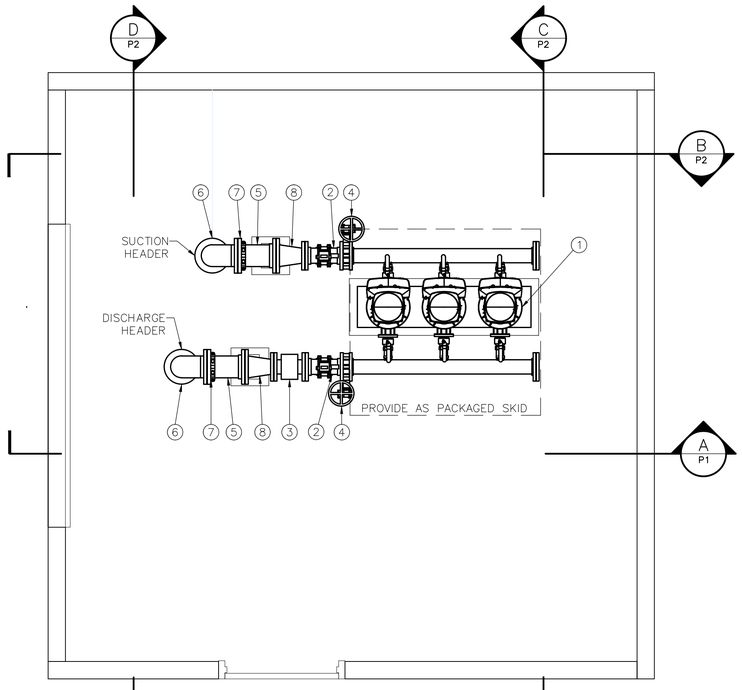

PROCESS PLAN
SCALE: 1/2" = 1'-0"

KEYNOTES

1. DUTY PUMP (TYP. OF 3)
2. 4" DIP
3. 4" MAGNETIC FLOW METER
4. 4" LUG STYLE BFV
5. 6" DIP
6. 6" DI 90° BEND
7. 6" RFCA (FORD UNI-FLANGE SERIES 400)
8. 6"x4" DI FL REDUCER
9. 6" DI MJ 90° BEND
10. 6" MJ RESTRAINT (EBAA IRON MEGALUG)
11. 2.5" PRESSURE GAUGE (½" MNPT)
12. ½" 316 SS THREADED TEE
13. ½" THD 316 SS BALL VALVE WITH LEVER
14. PRESSURE TRANSMITTER (½" FNPT)
15. 4"x1 ½" TAPPING SADDLE
16. ½"x½" SCH80 PVC MNPTxFNPT RED. BUSHING
17. ½" 316 SS PIPE
18. 6" TYPE 1 PIPE SUPPORT
19. 6" C900 PVC

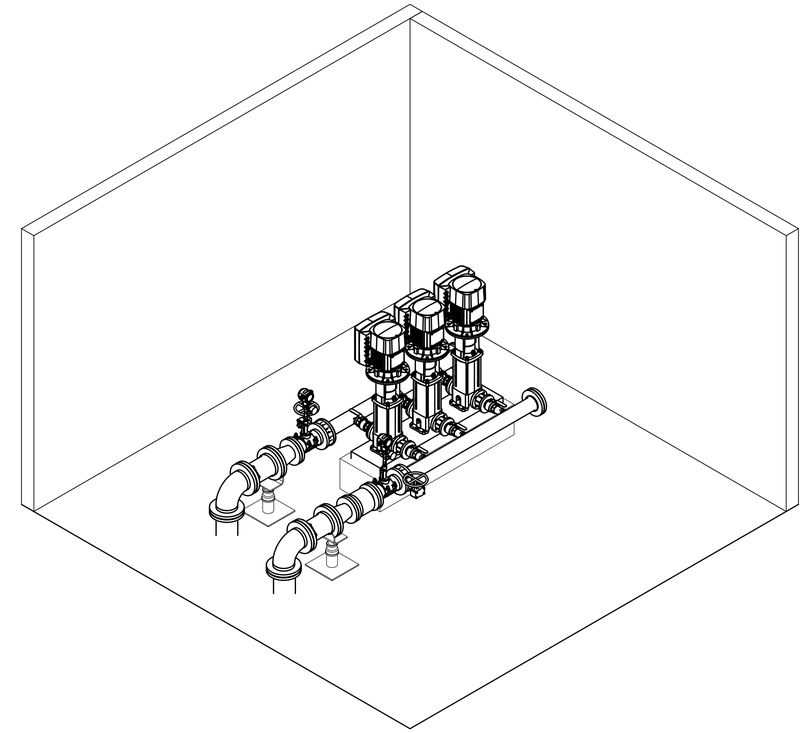

ISOMETRIC VIEW

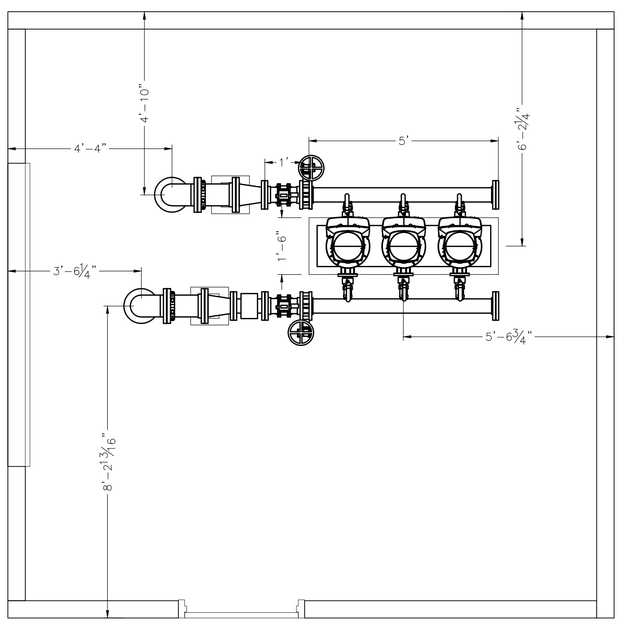

DIMENSION PLAN
SCALE: 1/2" = 1'-0"

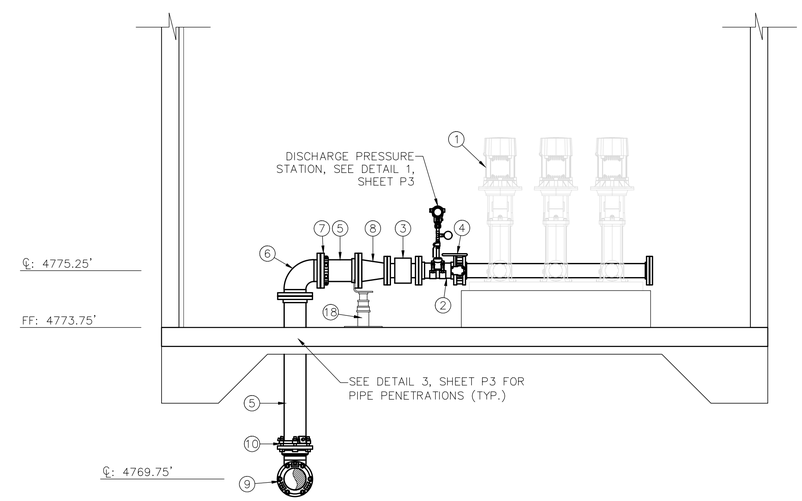

A P1 PROCESS SECTION
SCALE: 1/2" = 1'-0"

Graphic Scale
0 0'-9" 1'-6" 3'-0"
1/2" = 1'-0"

SGM
118 West Sixth Street, Suite 200
Glenwood Springs, CO 81601
970.945.1004
www.sgm-inc.com

Clifton Water District
Desert Road Pump Station

#	Revision	Date	By
1			
2			
3			

Project Milestone: FOR BID

Job No.	2025-354.02
Drawn by:	SK
Date:	07/23/2026
QC:	BB PE: BB
File:	DRPS-PS-Process

Title:
PROCESS PLANS & SECTION

Dwg No.
P1

I:\2025\2025-354-CliftonWaterOnCallEngin\02-Desert Rd Pump Station\H-Dwgs\Process\Plant 3D\DRPS\Orthos\DWGs\DRPS-PS-Process.dwg Plotted: 7/24/2026 3:44 PM By: Sarah Kothlow

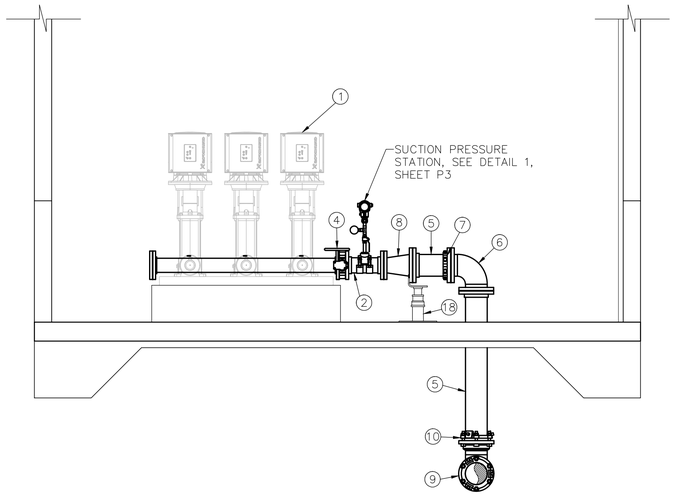

B / P2 PROCESS SECTION
SCALE: 1/2" = 1'-0"

KEYNOTES

1. DUTY PUMP (TYP. OF 3
2. 4" DIP
3. 4" MAGNETIC FLOW METER
4. 4" LUG STYLE BFV
5. 6" DIP
6. 6" DI 90° BEND
7. 6" RFCA (FORD UNI-FLANGE SERIES 400)
8. 6"x4" DI FL REDUCER
9. 6" DI MJ 90° BEND
10. 6" MJ RESTRAINT (EBAA IRON MEGALUG)
11. 2.5" PRESSURE GAUGE (½" MNPT)
12. ½" 316 SS THREADED TEE
13. ½" THD 316 SS BALL VALVE WITH LEVER
14. PRESSURE TRANSMITTER (½" FNPT)
15. 4"x1 ½" TAPPING SADDLE
16. ½"x½" SCH80 PVC MNPTxFNPT RED. BUSHING
17. ½" 316 SS PIPE
18. 6" TYPE 1 PIPE SUPPORT
19. 6" C900 PVC

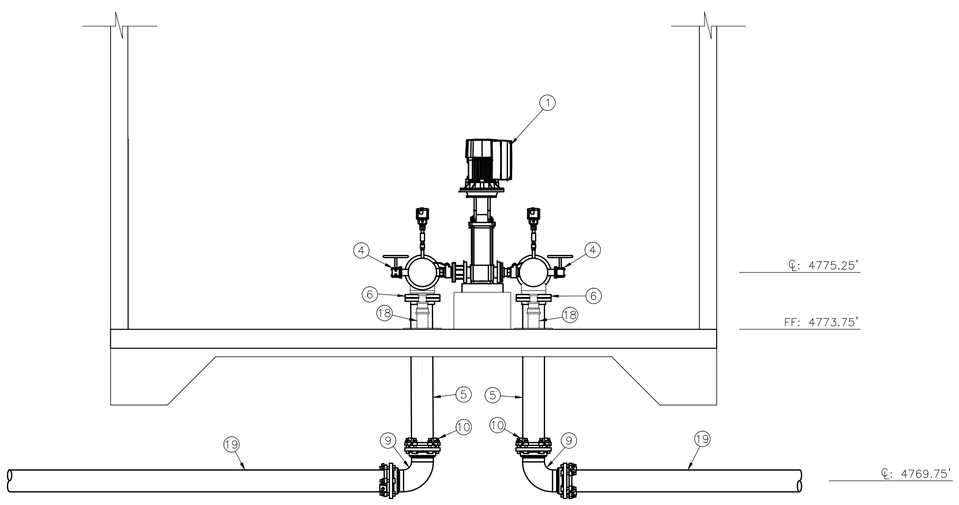

C / P2 PROCESS SECTION
SCALE: 1/2" = 1'-0"

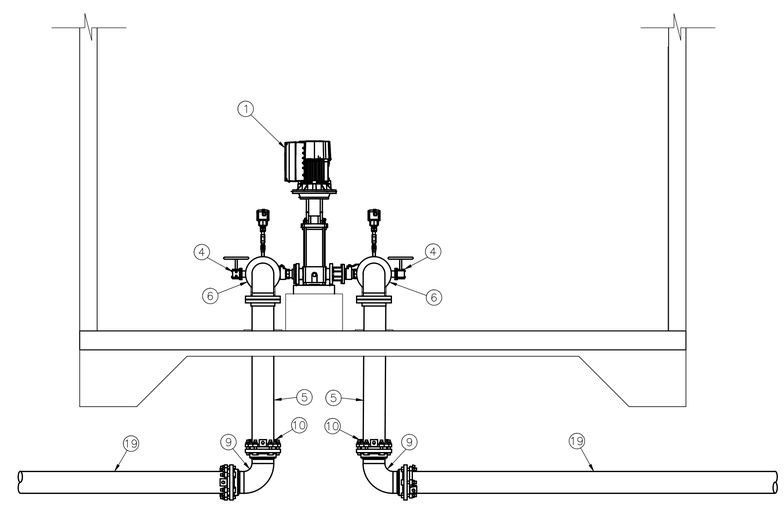

D / P2 PROCESS SECTION
SCALE: 1/2" = 1'-0"

Graphic Scale
0 0'-9" 1'-6" 3'-0"
1/2" = 1'-0"

SGM
118 West Sixth Street, Suite 200
Glenwood Springs, CO 81601
970.945.1004
www.sgm-inc.com

Clifton Water District
Desert Road Pump Station

#	Revision	Date	By:
1			
2			
3			

Project Milestone: FOR BID

Job No.	2025-354.02
Drawn by:	SK
Date:	07/23/2026
QC: BB	PE: BB
File:	DRPS-PS-Process2

Title: PROCESS SECTIONS

Dwg No. P2

I:\2025\2025-354-CliftonWaterDistCivilEngin\02-Desert Rd Pump Station\H-Dwgs\Process\Plant 3D\DRPS\Orthos\DWGs\DRPS-PS-Process2.dwg Plotted: 7/24/2026 3:45 PM By: Sarah Kothlow

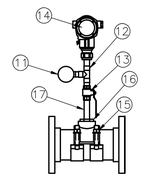

SUCTION
PRESSURE STATION

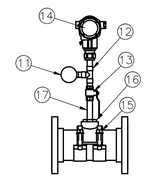

DISCHARGE
PRESSURE STATION

1 / P3 PROCESS DETAILS
N.T.S.

RESTRAINT TYPE	MOUNTING	APPLICATION	MODEL NUMBER*
TYPE 1	ADJUSTABLE THREADED PIPE FLANGE SUPPORT AND THREADED STAND (OR FIELD WELD SUPPORT TO BASE) WITH BASE PLATE BOLTED TO FLOOR	FULL RESTRAINT	EATON B-LINE B3094 W/ B3088T & B3089
TYPE 2	HEAVY DUTY ADJUSTABLE WALL BRACKET WITH U-BOLT CLAMP	FULL RESTRAINT	EATON B-LINE B3067
TYPE 3	ADJUSTABLE PIPE SUPPORT WITH PIPE SADDLE	SUPPORT ONLY	EATON B-LINE B3093 W/ B3088T
TYPE 4	HEAVY DUTY ADJUSTABLE WALL BRACKET WITH CLEVIS HANGER	SUPPORT ONLY	EATON B-LINE B3067
TYPE 5	ADJUSTABLE PIPE SUPPORT WITH U-BOLT STRAP AND THREADED STAND WITH BASE PLATE BOLTED TO FLOOR.	FULL RESTRAINT	EATON B-LINE B3092 W/ B3088T
TYPE 6	CLEVIS HANGER FROM CEILING	SUPPORT ONLY	EATON B-LINE B3100

* EATON B-LINE WAS USED AS DESIGN REFERENCE, EQUALS CAN BE SUBMITTED FOR APPROVAL

2 / P3 PIPE SUPPORT KEY
N.T.S.

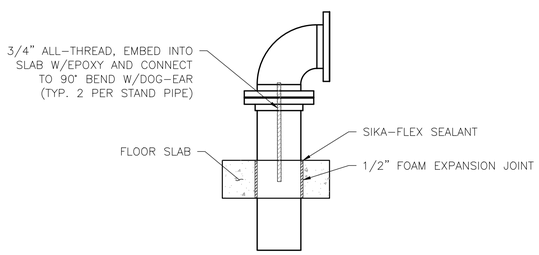

3 / P3 PIPE PENETRATION DETAIL
N.T.S.

SGM
118 West Sixth Street, Suite 200
Glenwood Springs, CO 81601
970.945.1004
www.sgm-inc.com

Clifton Water District

Desert Road Pump Station

#	Revision	Date	By:
1			
2			
3			

Project Milestone: FOR BID

Job No.	2025-354.02
Drawn by:	SK
Date:	07/23/2026
QC: BB	PE: BB
File:	DRPS-PS-ProcessDetails

Title:

PROCESS DETAILS

Dwg No.

P3

Of: X

I:\2025\2025-354-CliftonWaterOrCoEngin\02-Desert Rd Pump Station\H-Dwgs\Process\Plant 3D\DRPS\Orthos\DWGs\DRPS-PS-ProcessDetails.dwg Plotted: 7/23/2026 4:17 PM By: Sarah Kathlow

GENERAL NOTES

DEFINITIONS:

1. CONTRACTOR: THE ENTITY BINDED BY THE PRIME AGREEMENT WITH THE CLIENT TO PERFORM THE TASKS INDICATED IN THE CONTRACT DOCUMENTS. THE TERM CONTRACTOR INCLUDES AND IMPLIES ANY RELEVANT SUB-CONTRACTOR THAT MAY BE PERFORMING THE ACTUAL TASK UNDER THE CONTRACTOR'S DIRECTION.

2. CONTRACT DOCUMENTS: THE COMPLIMENTARY COLLECTION OF DRAWINGS, SPECIFICATIONS, AND PROJECT MANUAL, WHICH ARE DIRECTED TO THE CONTRACTOR, UNDER THE PRIME AGREEMENT.

3. FURNISH: TO SUPPLY, DELIVER, UNLOAD, AND INSPECT FOR DAMAGE.

4. INSTALL: TO UNPACK, ASSEMBLE, ERECT, APPLY, PLACE, FINISH, CURE, PROTECT, CLEAN, START UP, AND MAKE READY FOR USE.

5. PROVIDE: TO FURNISH AND INSTALL.

6. SUPPLY: SAME AS FURNISH.

7. PRODUCT: MATERIAL, MACHINERY, COMPONENTS, EQUIPMENT, FIXTURES, AND SYSTEMS FORMING THE WORK RESULT. NOT MATERIALS OR EQUIPMENT USED FOR PREPARATION, FABRICATION, CONVEYING, OR ERECTION AND NOT INCORPORATED INTO THE WORK RESULT. PRODUCTS MAY BE NEW, NEVER BEFORE USED, OR RE-USED MATERIALS OR EQUIPMENT.

8. PROJECT MANUAL: THE BOOK-SIZED VOLUME THAT INCLUDES THE PROCUREMENT REQUIREMENTS (IF ANY), THE CONTRACTING REQUIREMENTS, AND THE SPECIFICATIONS.

NATURE AND USE OF CONTRACT DOCUMENTS:

1. IF ANY DISCREPANCY IS FOUND WITHIN THE CONTRACT DOCUMENTS DURING CONSTRUCTION, SUBMIT AN RFI TO THE ENGINEER FOR DIRECTION BEFORE PROCEEDING. IF A DISCREPANCY IS FOUND DURING BIDDING, AND THE DESIGN TEAM DOES NOT PROVIDE A RESOLUTION BY THE FINAL ADDENDUM, BASE THE BID ON THE MORE COSTLY INTERPRETATION. FAILING TO DO SO WILL NOT BE CONSIDERED A VALID BASIS FOR CHANGE ORDERS DURING CONSTRUCTION.

2. THE CONTRACTOR IS RESPONSIBLE FOR PROVIDING COMPLETE CONTRACT DOCUMENTS TO ALL TRADES, AND FOR COORDINATING BETWEEN ALL TRADES TO ENSURE PROPER INSTALLATION OF COMPLETE AND FUNCTIONAL SYSTEMS AS SHOWN ON THE CONTRACT DOCUMENTS.

3. THE CONTRACTOR IS RESPONSIBLE FOR ALL SCOPES OF WORK, COMPLETENESS OF BIDS, AND PRICING EXERCISES. FURTHER, COORDINATION AND DIVISION OF SCOPE AMONGST SUB-CONTRACTORS IS THE RESPONSIBILITY OF THE CONTRACTOR.

4. DO NOT SCALE DRAWINGS FOR ROUGH-IN MEASUREMENTS OR USE AS SHOP DRAWINGS. WHERE DRAWINGS ARE REQUIRED FOR THESE PURPOSES OR HAVE TO BE MADE FROM FIELD MEASUREMENTS, TAKE THE NECESSARY MEASUREMENTS AND PREPARE THE DRAWINGS.

5. DRAWINGS ARE DIAGRAMMATIC IN NATURE AND DO NOT SHOW EVERY SYSTEM OFFSET REQUIRED. COORDINATE WITH THE EXISTING AND NEW STRUCTURE, ELECTRICAL, PLUMBING, FIRE PROTECTION AND CEILING TO PROVIDE OFFSETS AS REQUIRED AND APPROPRIATE.

CODES, INSPECTIONS, AND PERMITS:

1. PERFORM ALL WORK IN ACCORDANCE WITH THE CODES, REGULATIONS, AND LOCAL AMENDMENTS, AS CURRENTLY ADOPTED BY THE AUTHORITY HAVING JURISDICTION (AHJ).

2. IF ANY DISCREPANCIES ARE FOUND BETWEEN CONTRACT DOCUMENTS AND ANY APPLICABLE CODE OR LEGAL REQUIREMENT, SUBMIT AN RFI TO ENGINEER FOR DIRECTION BEFORE PROCEEDING.

3. OBTAIN ALL PERMITS AND INSPECTIONS, AND PAY FOR ALL UTILITY METERS AND UTILITY CONNECTIONS, REQUIRED BY THE AHJ FOR PROJECT COMPLETION.

WARRANTY:

1. UNCONDITIONALLY GUARANTEE ALL LABOR AND MATERIAL ON ALL WORK AGAINST DEFECTS IN WORKMANSHIP AND MATERIALS FOR A PERIOD OF ONE YEAR, FOLLOWING FINAL ACCEPTANCE, EXCEPT AS EXTENDED BY STANDARD MANUFACTURER WARRANTY AND/OR BY REQUIRED EXTENSION STATED IN THE CONTRACT DOCUMENTS.

SUBMITTALS AND SUBSTITUTIONS:

1. MEET THE CRITERIA DESCRIBED HEREIN, PRIOR TO ENGINEER'S REVIEW OF THE SUBMITTAL.

2. REFERENCE EQUIPMENT TAGS PROVIDED IN THE CONTRACT DOCUMENTS.

3. CLEARLY INDICATE THE INTENDED PRODUCT TYPE, MODE, OPTIONS, ACCESSORIES (FACTORY AND FIELD INSTALLED), AND ANY OTHER OPTIONS OF ANY KIND.

4. INDICATE THE PLAN ISSUANCE AND DATE ON WHICH SUBMITTAL IS BASED.

5. IF PROPOSING A SUBSTITUTION IN PLACE OF THE BASIS OF DESIGN EQUIPMENT, THE CONTRACTOR IS SOLELY RESPONSIBLE FOR THE SPATIAL REQUIREMENTS, ACOUSTICAL, THERMAL, PHOTOMETRIC, AND ELECTRICAL PERFORMANCE CHARACTERISTICS, AND COORDINATION OF ALL INSTALLATION REQUIREMENTS. REVIEW AND APPROVAL BY THE DESIGN TEAM DOES NOT ALTER OR MITIGATE THIS RESPONSIBILITY. CLEARLY MARK SUBSTITUTIONS AS SUCH.

6. DESCRIBE ANY IMPACT TO OTHER DIVISIONS CREATED BY A PRODUCT SUBSTITUTION ON THE SUBSTITUTION REQUEST FOR CONSIDERATION BY THE DESIGN TEAM. PROVIDE AN ESTIMATE OF ASSOCIATED COST IMPACT TO OTHER DIVISIONS WHERE APPLICABLE.

7. INDICATE WHERE PRODUCTS REQUIRE A PERFORMANCE DE-RATE DUE TO ALTITUDE EFFECTS.

8. RE-SUBMITTALS MUST CONTAIN MARKUPS THAT CLEARLY DELINEATE THE CHANGED ITEMS. ENGINEER WILL NOT RE-REVIEW THE ENTIRE SUBMITTAL PACKAGE IN ORDER TO FIND THE CHANGES.

9. ALL DATA REQUIRED FOR REVIEW MUST BE CONTAINED IN THE FILES PROVIDED TO THE ENGINEER. LINKS TO MANUFACTURER'S WEBSITES WILL NOT BE ACCEPTED.

10. ROOM SCHEDULES ARE ACCEPTABLE TO INDICATE QUANTITIES.

PROJECT CLOSEOUT REQUIREMENTS:

1. COMPLETE ALL REQUIRED AHJ INSPECTIONS. MAKE COPIES OF PERMITS AND INSPECTION REPORTS AVAILABLE.

2. PROVIDE A COMPLETE SET OF AS-BUILT PLANS AT THE COMPLETION OF THE PROJECT WITH ALL CHANGES NOTED.

3. CONDUCT A TRAINING SESSION FOR OWNER'S DESIGNATED STAFF FOR ALL CONTROLS SYSTEMS AND MAJOR EQUIPMENT. PRODUCE A SIGN IN SHEET FOR THIS SESSION SHOWING ATTENDEES, DATE, LIST OF EQUIPMENT AND SYSTEMS COVERED.

4. CLEAN JOB SITE OF ALL CONSTRUCTION DEBRIS, REPAIR ALL DAMAGED FINISHES. REMOVE ALL EXISTING EQUIPMENT LABELS THAT ARE NO LONGER ACCURATE, AND INSTALL NEW LABELING FOR NEW EQUIPMENT AND SYSTEMS.

5. DELIVER EQUIPMENT MANUALS AND ANY REQUIRED SPARE PARTS TO OWNER.

ACCESS AND CLEARANCES:

1. MAINTAIN ALL SERVICE AND ACCESS CLEARANCES REQUIRED BY CODE OR MANUFACTURER FOR ALL EQUIPMENT.

2. PROVIDE ACCESS FOR ALL EQUIPMENT, ETC. LOCATED ABOVE NON-ACCESSIBLE CEILINGS OR IN CONCEALED AREAS. PROVIDE SUFFICIENT ACCESS FOR SERVICING AND MAINTENANCE.

3. UTILIZE APPROPRIATELY RATED ACCESS PANELS WHEN PENETRATING A RATED ASSEMBLY.

PENETRATIONS AND RATED ASSEMBLIES:

1. THE ARCHITECTURAL PLANS SERVE AS THE REFERENCE FOR LOCATIONS OF RATED WALLS, PARTITIONS, AND ASSEMBLIES. COORDINATE ALL PENETRATIONS PRIOR TO ROUGH IN. FOR ALL PENETRATIONS OF FIRE RATED ASSEMBLIES, UTILIZE AN ASSEMBLY UL LISTED TO MAINTAIN THE RATING AND APPROVED BY ALL APPLICABLE CODES.

STRUCTURAL MODIFICATIONS:

1. DO NOT DRILL, NOTCH, CUT, OR ALTER STRUCTURAL MEMBERS IN ANY MANNER EXCEPT AS PERMITTED BY THE MATERIAL SPECIFIC SECTIONS OF THE BUILDING CODE, MANUFACTURER'S GUIDELINES FOR ENGINEERED PRODUCTS, OR THE RECOMMENDATION OF THE STRUCTURAL ENGINEER OF RECORD.

SUBSURFACE UTILITIES:

1. PROVIDE MEANS OF TRACING TO ALL UNDGROUND UTILITIES OUTSIDE THE BUILDING PERIMETER, IN COMPLIANCE WITH SUBSURFACE UTILITY ENGINEERING REGULATIONS.

2. PRIOR TO TRENCHING OR EXCAVATION, CONTACT UTILITY COMPANIES TO IDENTIFY UNDERGROUND UTILITIES AND LOCATE SECONDARY SERVICE FEEDERS, UNDERGROUND BRANCH CIRCUITS, GAS LINES, SPRINKLER LINES, ETC. ANY CUT OR DAMAGED UNDERGROUND SYSTEMS TO BE REPAIRED OR REPLACED AT CONTRACTOR'S EXPENSE.

EXISTING CONDITIONS AND DEMOLITION:

1. VISIT THE SITE AND BECOME FAMILIAR WITH EXISTING CONDITIONS TO THE EXTENT POSSIBLE BEFORE BEGINNING WORK. IF DISCREPANCIES ARE FOUND BETWEEN THE CONTRACT DOCUMENTS AND ACTUAL SITE CONDITIONS, SUBMIT AN RFI TO THE ARCHITECT OR ENGINEER FOR DIRECTION BEFORE PROCEEDING.

2. COORDINATE IN ADVANCE ALL WORK THAT AFFECTS EXISTING SYSTEMS OR OPERATIONS (SUCH AS SHUT DOWNS, TIE-INS, OR DEMOLITION), WITH THE BUILDING OWNER IN ADVANCE.

3. RETURN EXISTING EQUIPMENT NOTED AS TO BE REMOVED TO OWNER IN THE SAME CONDITION AS FOUND (EXCEPT WHERE CONTRACT DOCUMENTS CALL FOR DISPOSAL BY CONTRACTOR). COORDINATE DELIVERY AND STORAGE LOCATION WITH CONTRACTOR.

4. COORDINATE REPAIR OF ADJACENT CONSTRUCTION AND FINISHES DAMAGED OR EXPOSED DURING DEMOLITION WORK. MATCH EXISTING FINISHES, AND INCLUDE PAINT ON ENTIRE WALL OR ROOM IF REQUIRED TO MATCH COLOR.

5. X-RAY ANY SLAB PENETRATIONS PRIOR TO CORE DRILLING.

STARTUP AND VERIFICATION REQUIREMENTS

SPECIFICATION 230800: COMMISSIONING OF HVAC

DEVICE	SUBMITTAL REQUIREMENT				NOTES
	STARTUP REPORT	TEST & BALANCE REPORT	SETPOINT VERIFICATION	SEQEUNCE OF OPERATION	
HPU-1 AND FCU-1	X		X		ALL

NOTES:

1. FOR EACH DEVICE OR ITEM LISTED, SUBMIT THE SPECIFIED INFORMATION TO THE ENGINEER OF RECORD.

2. REFER TO MANUFACTURER'S INSTALLATION REQUIREMENTS FOR STARTUP INFORMATION WHEN FACTORY STARTUP IS NOT PROVIDED OR SPECIFIED.

3. REFER TO TEST AND BALANCE SPECIFCATION.

4. REFER TO SEQUENCES OF OPERATION FOR LIST OF SETPOINTS AND VALUES ASSOCIATED WITH EACH DEVICE. SUBMIT LIST OF SETPOINTS INCLUDING:
-DATE OF VERIFICATION
-INITIAL OF INDIVIDUAL RESPONSIBLE
-VALUE IF SETPOINT OF FIELD ADJUSTED OR DETERMINED

5. REFER TO SEQUENCE OF OPERATION. VERIFY OPERATION OCCURS AS SPECIFIED. SUBMIT DEVICE LIST CONTAINING:
-DATE OF VERIFICATION
-INITIAL OF INDIVIDUAL RESPONSIBLE

MECHANICAL SPECIFICATIONS

MOUNTING HEIGHTS:

1. MOUNT ALL THERMOSTATS AT 54 INCHES AFF, UNLESS NOTED OTHERWISE.

CONTROL WIRING:

1. PROTECT ALL EXPOSED CONTROL AND LOW VOLTAGE WIRING BY INSTALLING WITHIN EMT CONDUIT.

SUBMITTALS:

1. REFER TO GENERAL NOTES FOR SUBMITTAL REQUIREMENTS.

2. AT MINIMUM, PROVIDE SUBMITTALS FOR THE FOLLOWING:
A. SPECIFICATION SECTION WHEN INDICATED.
B. SCHEDULED EQUIPMENT.
C. SCHEDULED MATERIALS.
D. TEST AND BALANCE REPORTS.
E. STARTUP AND VERIFICATION DATA.

3. PROVIDE SEPARATE SUBMITTALS FOR EACH: SPECIFICATION SECTION WHEN INDICATED, MATERIAL SCHEDULE, EQUIPMENT SCHEDULE. SUBMITTALS ENCOMPASSING MULTIPLE CATEGORIES MAY BE REJECTED ON THIS BASIS.

MECHANICAL COMMISSIONING:

1. THIS PROJECT IS EXEMPT FROM MECHANICAL COMMISSIONING (IECC SECTION C408.2) VIA EXCEPTION 1.

"MECHANICAL SYSTEMS AND SERVICE WATER HEATER SYSTEMS IN BUILDINGS WHERE THE TOTAL MECHANICAL EQUIPMENT CAPACITY IS LESS THAN 480,000 BTU/H (140.7 KW) COOLING CAPACITY AND 600,000 BTU/H (175.8 KW) COMBINED SERVICE WATER HEATING AND SPACE-HEATING CAPACITY."

SPLIT DX SYSTEMS:

1. CONSTRUCT ALL PIPING IN ACCORDANCE WITH THE MATERIALS, FITTINGS, METHODS, AND INSULATION REQUIREMENTS, AS INDICATED ELSEWHERE WITHIN THE PROJECT DOCUMENTS.

2. INSTALL REFRIGERATION SPECIALTIES IN ACCORDANCE WITH MANUFACTURER'S INSTRUCTIONS.

3. PIPING INSTALLATION SHALL NOT EXCEED EQUIPMENT MANUFACTURER MAXIMUM VERTICAL AND HORIZONTAL LENGTHS. CONTRACTOR TO VERIFY FINAL LENGTHS ARE IN ACCORDANCE WITH MANUFACTURER SPECIFICATIONS PRIOR TO PURCHASING AND INSTALLATION.

4. PROVIDE FACTORY STARTUP ON COMPLETE SYSTEM.

ELECTRICAL ROOMS:

1. ONLY PIPING DEDICATED TO EQUIPMENT SERVING OR CONDITIONING AN ELECTRICAL ROOM MAY BE INSTALLED IN THE ELECTRICAL ROOM. IN SUCH CASES, PROVIDE SECONDARY CONTAINMENT TO PREVENT LEAKS AND/OR CONDENSATION, V/A SECONDARY CONTAINMENT BENEATH THE PIPE, WITH AUDIBLE ALARM UPON LEAK DETECTION OR VISUAL "TELL TALE" DRAIN TERMINATION LOCATION. REFERENCE NEC 110. IN NO CASE MAY PIPING OR DUCTWORK BE INSTALLED DIRECTLY ABOVE ELECTRICAL EQUIPMENT WITHIN THE SPACE.

SEISMIC CRITERIA:

1. THE AMERICAN SOCIETY OF CIVIL ENGINEERS STANDARD 7 (ASCE 7) SEISMIC CATAGORY IS AS SPECIFIED BY THE STRUCTURAL ENGINEER OF RECORD.
2. THE ASCE 7 IMPORTANCE FACTORS (I_P) FOR SYSTEMS, COMPONENTS AND EQUIPMENT (PER CHAPTER 13, SECTION 1) ARE AS FOLLOWS:
2.1 ALL SYSTEMS UNLESS NOTED OTHERWISE: I_P = 1.0.
2.2 NATURAL GAS SYSTEMS AND EQUIPMENT, INCLUDING GAS DETECTION: I_P = 1.5.
2.3 FLAMMABLE REFRIGERANTS INCLUDING THOSE CLASSIFIED AS A2L: I_P = 1.5.

COOLING COIL CONDENSATE AND DISPOSAL:

1. UNLESS NOTED OTHERWISE:
1.1 PROVIDE CONDENSATE PUMP FOR ALL ALL COOLING COILS.
1.2 PROVIDE UL 508 LISTED CONDENSATE SWITCH FOR ALL COOLING COIL DRAIN PAINS. MOUNT SWITCH IN OVERFLOW POSITION OR ABOVE THE PRIMARY DRAIN OUTLET. UPON DETECTION OF CONDENSATE, THE EQUIPMENT SHALL SHUT OFF

Mechanical Compliance Certificate

Project Information

Energy Code:	2021 IECC
Project Title:	Desert Road Pump Station
Location:	Orchard Mesa, Colorado
Climate Zone:	5b
Project Type:	New Construction

Construction Site:	Owner/Agent:	Designer/Contractor:
Parcel #2959-303-00-333 Grand Junction , Colorado 81501	Clifton Water District Colorado	SGM 118 W 8th St Glenwood Springs , Colorado 81601

Mechanical Systems List

Quantity	Component	Description
HVAC Systems		
1	Heat Pump Split System Trane MUZ/MSZ (Single Zone):	Split System Heat Pump Heating Mode: Capacity = 14 kBtu/h, Proposed Efficiency = 10.00 HSPF2, Required Efficiency = 7.50 HSPF2 Cooling Mode: Capacity = 14 kBtu/h, Proposed Efficiency = 22.20 SEER2, Required Efficiency = 14.30 SEER2 Proposed Part Load Efficiency = 0.00 , Required Part Load Efficiency = 0.00 Fan System: Unspecified

Mechanical Compliance Statement

Compliance Statement: The proposed mechanical design represented in this document is consistent with the building plans, specifications, and other calculations submitted with this permit application. The proposed mechanical systems have been designed to meet the 2021 IECC requirements in COMcheckWeb and to comply with any applicable mandatory requirements listed in the Inspection Checklist.

Name - Title **Signature** **Date**

MECHANICAL SYMBOL LEGEND

ANNOTATION SYMBOLS

- ## — KEYNOTE TAG
- ## — REVISION TAG
- AA-#-### — EQUIPMENT TAG REFER TO EQUIPMENT SCHEDULE
- AA-#-### — REFERENCE EQUIPMENT TAG SPECIFIED BY ANOTHER DISCIPLINE
- Type CFM / Size — GRILLE, REGISTER, DIFFUSER TAG

LINETYPES / PHASING

- NEW, OR OTHER ACTION ITEMS *(Solid dark lines)*
- ITEMS TO BE DEMOLISHED *(Dashed dark lines on demo plans)*
- reference info — EXISTING ITEMS TO REMAIN *(Solid light lines and text)*
- CONNECT NEW TO EXISTING

DEVICE SYMBOLS

- T — TEMPERATURE SENSOR
- T — THERMOSTAT
- M — MOTORIZED DAMPER

CONTROL & INSTRUMENTATION SYMBOLS

- FLOW SWITCH
- PRESSURE GAUGE
- PRESSURE AND TEMPERATURE TAP
- THERMOMETER

COUPLING & CONNECTOR SYMBOLS

- FLANGED CONNECTION
- UNION

VALVE SYMBOLS

- 2-WAY VALVE
- 3-WAY VALVE
- ISOLATION VALVE
- BALANCING VALVE
- TP — TEMP. AND PRESSURE RELIEF VALVE
- CHECK VALVE

HYDRONIC SPECIALTIES SYMBOLS

- AIR VENT
- STRAINER

EQUIPMENT SYMBOLS

- PUMP

PIPING LINE TYPES

- SYSTEM TYPE — SUPPLY / DRAIN
- SYSTEM TYPE — RETURN
- SYSTEM TYPE — BELOW GRADE

PIPE SYSTEM TYPE ABBREVIATIONS

C	CONDENSATE
CA	COMPRESSED AIR
CD	GRAVITY FLOW CONDENSATE DRAIN
PCD	PUMPED CONDENSATE DRAIN
CH	CHILLED WATER
CW	CONDENSATE WATER
HW	HEATING WATER
RL/RS	REFRIGERANT LINESET
RS	REFRIGERANT SUCTION
RL	REFRIGERANT LIQUID
SM	SNOWMELT
HR	HEAT RECOVERY
HPS	HIGH PRESSURE STEAM
MPS	MEDIUM PRESSURE STEAM
LPS	LOW PRESSURE STEAM
HGBP	HOT GAS BYPASS

DUCT SYSTEM TYPE ABBREVIATIONS

FV	FLUE VENT
CA	COMBUSTION AIR
OA	OUTSIDE AIR (UNCONDITIONED)
FA	FRESH AIR (CONDITIONED)
SA	SUPPLY AIR
RA	RETURN AIR
EA	EXHAUST (GENERAL)
GE	GREASE EXHAUST
TA	TRANSFER AIR

ADOPTED CODES

NEC	2023
IECC	2021
IBC	2024
IMC	2024
IFGC	2021
IPC	2021
LOCAL AMENDMENTS	ORDINANCE 008(D)
AHJ	MESA COUNTY

PLANSET BASED ON STRUCTURAL MODEL DATE: 5/18/2026

SITE ELEVATION REFERENCES:
4773.75 FT. ELEVATION = 100 FT. STRUCTURAL (T.O. SLAB) REFERENCE ELEVATION

MECHANICAL SHEET LIST

Sheet Number	Sheet Name
M1	MECHANICAL LEGEND AND SPECIFICATIONS
M2	PLANS
M3	SCHEDULES

SITE CONDITIONS

ELEVATION	AIR DENSITY RATIO	CLIMATE ZONE	WINTER DESIGN	SUMMER_DESIGN
4773' - 9"	0.84	5B	-5 °F	105 °F

SGM
118 West Sixth Street, Suite 200
Glenwood Springs, CO 81601
970.945.1004
www.sgm-inc.com

NOT FOR CONSTRUCTION

Desert Road Pump Station
PARCEL #2969-303-00-333
GRAND JUNCTION, CO 81501

#	Description:	Date:	By:

Project Milestone: BID SET

Job No. 2025-354.002
Drawn by: PG
Print Date: 7/17/26
QC: SGM | PE: BC
File: DesertRdPS_ME_R25.rvt

Title: MECHANICAL LEGEND AND SPECIFICATIONS

Dwg No. M1

Central Model: I:\2025\2025-354-CliftonWaterOnCall\Engin\02-Desert Rd Pump Station\Dwgs\Mep\Revit\DesertRdPS_ME_R25.rvt
7/29/2026 5:27:53 PM
Autodesk Docs://Desert Rd PS/DesertRdPS_ME_R25.rvt

REFRIGERATION CONCENTRATION CALCULATIONS

SYSTEM	REFRIGERANT TYPE	REFRIGERANT CLASSIFICATION (ASHRAE 34, TABLE 4-1)	SYSTEM TYPE, EQUATION (PER ASHRAE 15)	FCU, SSO, OR BS UNIT TAG	SMALLEST ROOM (ASHRAE 15 7.2.3.1 / 7.2.3.3)	ROOM MINIMUM FLOOR AREA (SF)	MINIMUM CEILING HEIGHT (FT)	EFFECTIVE DISPERSAL VOLUME (V_EFF) (CF)	RELEASEABLE REFRIGERANT CHARGE OF CIRCUIT (M_REL) (LBS)	EVDC (LBS)	CODE COMPLIANT (M_REL ≤ EVDC)
HPU-1	R-454B	A2L	HIGH PROBABLILITY, WITH AIR...	FCU-1	PUMP ROOM	230	10	2300	2.3	21.28	YES

1. CALCULATION BASED ON 2024 ASHRAE STANDARDS 34 AND 15.
2. NOT ALL COMMUNICATIONS BETWEEN SPACES ARE LISTED. ONLY SPACES DEEMED CRITICAL INDICATE AN ADDITIONAL COMMINCATION VOLUME IN ORDER TO DEMONSTRATE A PATH OF COMPLIANCE. ACTUAL SPACE AREAS AND VOLUMES MAY BE LARGER THAN INDICATED, THUS REMAINING CODE COMPLIANT.
3. HIGH PROBABILITY SYSTEMS WITH AIR CIRCULATION SHALL BE EQUIPPED WITH FACTORY INSTALLED REFRIGERANT LEAK DETECTORS IN ACCORDANCE WITH ASHRAE STANDARD 15 2024 SECTION 7.6.2.3 CAPABLE OF INITIATING MITIGATION ACTIONS.
4. SPACES WITH RESULTANT EDVC<M_REL REQUIRE ADDITIONAL REFRIGERANT LEAK MITIGATION MEASURES, SUCH AS MECHANICAL VENTILATION.

MECHANICAL PIPING MATERIAL APPLICATION SPECIFICATION

SPECIFICATION: 232300 REFRIGERANT PIPING.

SYSTEM	DESCRIPTION	MATERIAL	JOINTS	FITTINGS	TEES	INSULATION (YES/NO)
REFRIGERANT PIPING	SPLIT SYSTEMS	ACR COPPER - ANNEALED	FLARED COMPRESSION FITTINGS	MANDREL BENT	NA	YES, PER SCHEDULE.
		ACR COPPER - HARD DRAWN	BRAZED	LONG RADIUS ELBOWS	NA	YES, PER SCHEDULE.

NOTES:
1. VALVES REPRESENT A MINIMUM STANDARD OF QUALITY. SUBSTITUTIONS OF EQUAL OR GREATER QUALITY ARE ALLOWED WITH ENGINEER'S APPROVAL.
2. ALL ISOLATION VALVES SHALL BE CAPABLE OF DEAD END SERVICE.
3. BALANCE VALVES AND CIRCUIT SETTER SIZES SHALL BE DETERMINED BY FLOW RATE REQUIRED IN LIEU OF LINE SIZE.
4. ALL PEX BASED PIPING SHALL USE FITTINGS, JOINTS, VALVES, AND METHODS AS REQUIRED BY THE SPECIFIC MANUFACTURER, SO AS NOT VOID ANY WARRANTY UPON INSTALLATION.

COPPER TUBE, ACR, HARD DRAWN:
1. PIPE: ASTM B280, H58 HARD DRAWN.
2. BRAZING: AWS A5.8M BCuP SILVER PHOSPHORUS COPPER ALLOY.
3. FITTINGS: ASME B16.50 WROUGHT COPPER SUITABLE FOR BRAZING. LONG RADIUS ELBOWS SUITABLE FOR APPLICATION.

COPPER TUBE, ACR, ANNEALED:
1. PIPE: ASTM B280, O60 SOFT ANNEALED.
2. BRAZING: AWS A5.8M BCuP SILVER PHOSPHORUS COPPER ALLOY.
3. FITTINGS: ASME B16.26 CAST COPPER FITTINGS FOR FLARED COPPER TUBES, MANDREL BENT BENDS.

1. SUPPORT ALL PIPING IN ACCORDANCE WITH MSS SP-58 STANDARD.

MECHANICAL PIPING INSULATION SCHEDULE TABLE C403.2.10

SPECIFICATION: 230719 PIPE INSULATION.

SYSTEM	FLUID OPERATING TEMPERATURE RANGE (°F)	INSULATION THICKNESS BASED ON NOMINAL PIPE OR TUBE SIZE (IN.)					TYPE	NOTES:
		<1 (PIPE SIZE)	1 to < 1.5 (PIPE SIZE)	1.5 to < 4 (PIPE SIZE)	4 to < 8 (PIPE SIZE)	≥ 8 (PIPE SIZE)		
TRANE SPLIT SYSTEM MUZ/MSZ-GX (GAS)	141-200	1.5	NA	NA	NA	NA	FLEXIBLE ELASTOMERIC CELLULAR	1
TRANE SPLIT SYSTEM MUZ/MSZ-GX (LIQUID)	105-140	1	NA	NA	NA	NA	FLEXIBLE ELASTOMERIC CELLULAR	1

FLEXIBLE ELASTOMERIC CELLULAR:
1. ARMACELL ARMAFLEX SHIELD, FLEXIBLE ELASTOMERIC CELLULAR RUBBER, 0.28 K VALUE AT 75F. MAXIMUM SERVICE TEMPERATURE ≥220F. COMPLYING WITH ASTM C534. WATER PROOF VAPOR BARRIER ADHESIVE. UV RESISTANCE COATING, SUITABLE FOR OUTDOOR APPLICATIONS, MEETING ASTM C1775.FLAME SPREAD/SMOKE DEVELOPED INDEX OF 25/50 OR LESS.

NOTES:
1. REFRIGERANT SYSTEM OPERATING TEMPERATURES VARY BY MANUFACTURER AND MODEL. SUBMIT MODEL SPECIFIC REFRIGERANT LINE OPERATING TEMPERATURES ORIGINATING FROM THE MANUFACTURER AS PART OF THE INSULATION SUBMITTAL PACKAGE. ACTUAL REQUIREMENT MAY VARY FROM THAT INDICATED, AND WILL BE VERIFIED THROUGH THE SUBMITTAL PROCESS.

EQUIPMENT HEAT REJECTION BASIS

ITEM	LOCATION	DEVICE TYPE	SIZE	EFFICIENCY (%)	OPERATION
XF1	PUMP ROOM	TRANSFORMER	10 HP	95%	CONTINUOUS AND CONCURRENT WITH OTHER ITEMS UNLESS NOTED OTHERWISE
BP 1	PUMP ROOM	PUMP	10 HP	95%	CONTINUOUS AND CONCURRENT WITH OTHER ITEMS UNLESS NOTED OTHERWISE
BP 2	PUMP ROOM	PUMP	10 HP	95%	INTERMITTENT AND NON-CONCURRENT WITH OTHER ITEMS
VFD1	PUMP ROOM	VFD	10 HP	97%	CONTINUOUS AND CONCURRENT WITH OTHER ITEMS UNLESS NOTED OTHERWISE
VFD2	PUMP ROOM	VFD	10 HP	97%	CONTINUOUS AND CONCURRENT WITH OTHER ITEMS UNLESS NOTED OTHERWISE
VFD-3	PUMP ROOM	VFD	10 HP	97%	INTERMITTENT AND NON-CONCURRENT WITH OTHER ITEMS

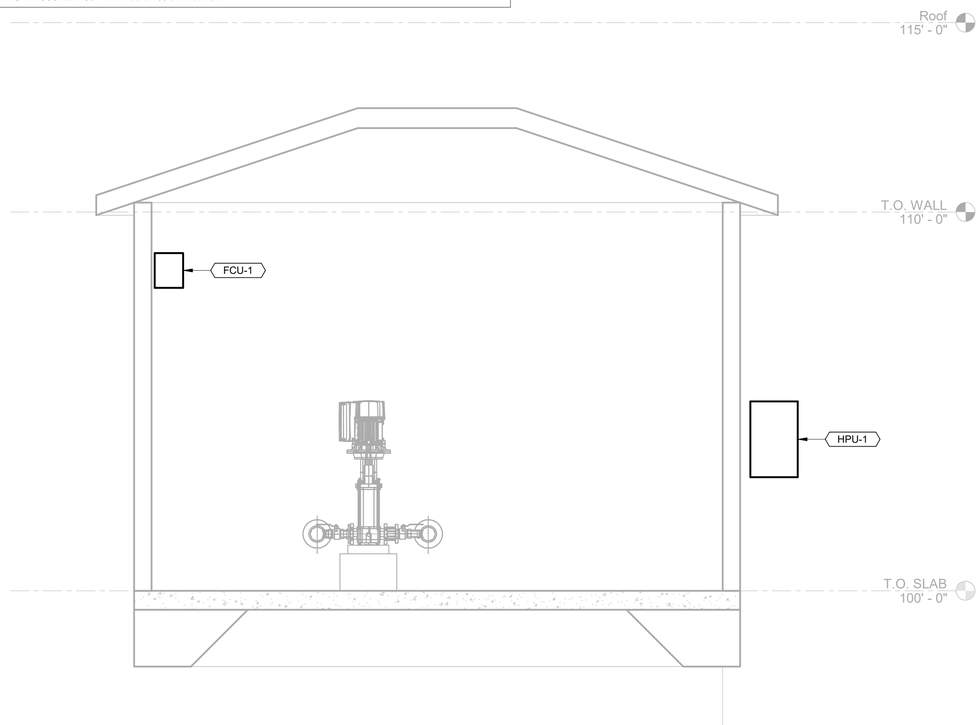

2 MECHANICAL SECTION
SCALE: 1/2" = 1'-0"

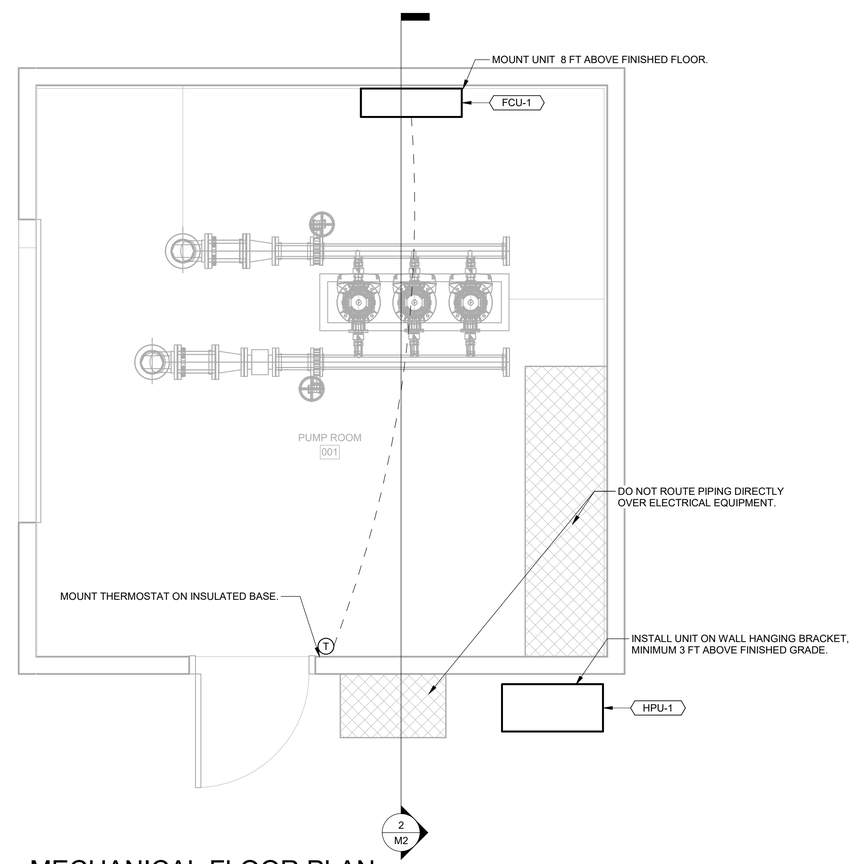

NORTH

1 MECHANICAL FLOOR PLAN
SCALE: 1/2" = 1'-0"

SGM
118 West Sixth Street, Suite 200
Glenwood Springs, CO 81601
970.945.1004
www.sgm-inc.com

NOT FOR CONSTRUCTION

Desert Road Pump Station
PARCEL #2969-303-00-333
GRAND JUNCTION, CO 81501

#	Description:	Date:	By:

Project Milestone: PRELIMINARY

Job No.	2025-354.002
Drawn by:	PG
Print Date:	5/27/26
QC: SGM PE:	BC
File:	DesertRdPS_ME_R25.rvt

Title: PLANS

Dwg No. M2

Central Model: I:\2025\2025-354-Clifton Water On Call\Engin\02-Desert Rd Pump Station\H-Dwgs\Mech\Revit\DesertRdPS_ME_R25.rvt

5/27/2026 6:49:47 PM

C:\Users\pgomez\Documents\DesertRdPS_ME_R25_pabkgPWVF.rvt

FAN COIL UNIT SCHEDULE - HEAT PUMP SOURCE

SPECIFICATION 238219: FAN COIL UNITS

UNIT TAG	MFR.	MODEL	CONFIGURATION	SERVICE	HEAT PUMP UNIT	REFRIGERANT		FAN				SOUND (DBA)	FILTER	COOLING							HEATING					ELECTRICAL DATA					DIMENSIONS			APPROX. WEIGHT (LBS)	REMARKS
						TYPE	CHARGE (LBS)	VOLUME @ PROJECT ALTITUDE (CFM)	S.P. @ PROJECT ALTITUDE (IN.WG.)	S.P. @ SEA LEVEL (IN.WG.)	FAN SPEED (T/H/M/L)			NOMINAL CAPACITY (MBH)	ACTUAL TOTAL CAPACITY (MBH)	SENSIBLE CAPACITY (MBH)	SENSIBLE LOAD (MBH)	EAT DB (°F)	EAT WB (°F)	LAT DB (°F)	NOMINAL CAPACITY (MBH)	ACTUAL CAPACITY (MBH)	REQUIRED CAPACITY (MBH)	EAT DB (°F)	LAT DB (°F)	VOLTS	PHASE	MCA (A)	UNIT FLA (A)	UNIT MOCP (A)	WIDTH (IN.)	HEIGHT (IN.)	DEPTH (IN.)		
FCU-1	MITSUBISHI / TRANE	MSZ-GX15NL	HIGH WALL	PUMP STATION	HPU-1	R454B	2.25	586	NA	NA	H	46	WASHABLE	14.0	10.6	10.6	8.7	90	59	70	18	9.1	9.0	50	87	208 230	1	1	POWERED BY OUTDOOR		32	11.8	9.6	23	ALL

REMARKS:
1. PERFORMANCE VALUES ARE AT PROJECT ALTITUDE UNLESS NOTED OTHERWISE.
2. FURNISH WITH THE FOLLOWING ACCCESSORIES: CONDENSATE OVERFLOW SWITCH, HARD WIRED 7 DAY PROGRAMMABLE THERMOSTAT, CONDENSATE PUMP.
3. REFER TO OUTDOOR UNIT FOR ADDITIONAL CONTROLS AND ACCESSORIES.

AIR SOURCE HEAT PUMP SCHEDULE

SPECIFICATION 238143: AIR-SOURCE UNITARY HEAT PUMPS

UNIT TAG	INDOOR UNIT TAG	MFR.	MODEL	REFRIGERANT TYPE	NOMINAL CAPACITY		NOMINAL SYSTEM CONNECTED CAPAPCITY (% OF NOM)	AMBIENT TEMP.		CORRECTED CAPACITIES		COOLING EFFICIENCY SEER2	HEATING COP @ 47F	UNIT ELECTRICAL DATA					DIMENSIONS			WEIGHT (LBS)	NOTES
					COOLING (MBH)	HEATING (MBH)		SUMMER (F)	WINTER (F)	COOLING (MBH)	HEATING (MBH)			V	PH	HZ	MCA (AMPS)	MOCP (AMPS)	LENGTH (IN)	HEIGHT (IN)	WIDTH (IN)		
HPU-1	FCU-1	MITSUBISHI / TRANE	MUZ-GX15NLHZ	R-454B	14.0	14.0	100.00	105	-5	10.5	9.1	22.2	3.73	208-230	1	60	16	20	15	24.5	31.5	82	ALL

NOTES:
1. ALL PERFORMANCE VALUES AT PROJECT ALTITUDE.
2. FURNISH WITH WALL MOUNTING BRACKET, LOW AMBIENT HOOD KIT AND ASSOCIATED WIND BAFFLES.

SGM
118 West Sixth Street, Suite 200
Glenwood Springs, CO 81601
970.945.1004
www.sgm-inc.com

NOT FOR CONSTRUCTION

Desert Road Pump Station
PARCEL #2969-303-00-333
GRAND JUNCTION, CO 81501

#	Description:	Date:	By:

Project Milestone: PRELIMINARY

Job No.	2025-354.002
Drawn by:	PG
Print Date:	5/27/26
QC: SGM | PE:	BC
File:	DesertRdPS_ME_R25.rvt

Title: SCHEDULES

Dwg No. M3

Central Model: I:\2025\2025-354-CitiesWaterOnCall\Engin\02-Desert Rd Pump Station\H-Dwgs\Map\Revit\DesertRdPS_ME_R25.rvt
5/27/2026 6:49:47 PM
C:\Users\pgorne\Documents\DesertRdPS_ME_R25_pablogRVF.rvt

GENERAL NOTES

DEFINITIONS:

1. CONTRACTOR: THE ENTITY BINDED BY THE PRIME AGREEMENT WITH THE CLIENT TO PERFORM THE TASKS INDICATED IN THE CONTRACT DOCUMENTS. THE TERM CONTRACTOR INCLUDES AND IMPLIES ANY RELEVANT SUB-CONTRACTOR THAT MAY BE PERFORMING THE ACTUAL TASK UNDER THE CONTRACTOR'S DIRECTION.

2. CONTRACT DOCUMENTS: THE COMPLIMENTARY COLLECTION OF DRAWINGS, SPECIFICATIONS, AND PROJECT MANUAL, WHICH ARE DIRECTED TO THE CONTRACTOR, UNDER THE PRIME AGREEMENT.

3. FURNISH: TO SUPPLY, DELIVER, UNLOAD, AND INSPECT FOR DAMAGE.

4. INSTALL: TO UNPACK, ASSEMBLE, ERECT, APPLY, PLACE, FINISH, CURE, PROTECT, CLEAN, START UP, AND MAKE READY FOR USE.

5. PROVIDE: TO FURNISH AND INSTALL.

6. SUPPLY: SAME AS FURNISH.

7. PRODUCT: MATERIAL, MACHINERY, COMPONENTS, EQUIPMENT, FIXTURES, AND SYSTEMS FORMING THE WORK RESULT. NOT MATERIALS OR EQUIPMENT USED FOR PREPARATION, FABRICATION, CONVEYING, OR ERECTION AND NOT INCORPORATED INTO THE WORK RESULT. PRODUCTS MAY BE NEW, NEVER BEFORE USED, OR RE-USED MATERIALS OR EQUIPMENT.

8. PROJECT MANUAL: THE BOOK-SIZED VOLUME THAT INCLUDES THE PROCUREMENT REQUIREMENTS (IF ANY), THE CONTRACTING REQUIREMENTS, AND THE SPECIFICATIONS.

NATURE AND USE OF CONTRACT DOCUMENTS:

1. IF ANY DISCREPANCY IS FOUND WITHIN THE CONTRACT DOCUMENTS DURING CONSTRUCTION, SUBMIT AN RFI TO THE ENGINEER FOR DIRECTION BEFORE PROCEEDING. IF A DISCREPANCY IS FOUND DURING BIDDING, AND THE DESIGN TEAM DOES NOT PROVIDE A RESOLUTION BY THE FINAL ADDENDUM, BASE THE BID ON THE MORE COSTLY INTERPRETATION. FAILING TO DO SO WILL NOT BE CONSIDERED A VALID BASIS FOR CHANGE ORDERS DURING CONSTRUCTION.

2. THE CONTRACTOR IS RESPONSIBLE FOR PROVIDING COMPLETE CONTRACT DOCUMENTS TO ALL TRADES, AND FOR COORDINATING BETWEEN ALL TRADES TO ENSURE PROPER INSTALLATION OF COMPLETE AND FUNCTIONAL SYSTEMS AS SHOWN ON THE CONTRACT DOCUMENTS.

3. THE CONTRACTOR IS RESPONSIBLE FOR ALL SCOPES OF WORK, COMPLETENESS OF BIDS, AND PRICING EXERCISES. FURTHER, COORDINATION AND DIVISION OF SCOPE AMONGST SUB-CONTRACTORS IS THE RESPONSIBILITY OF THE CONTRACTOR.

4. DO NOT SCALE DRAWINGS FOR ROUGH-IN MEASUREMENTS OR USE AS SHOP DRAWINGS. WHERE DRAWINGS ARE REQUIRED FOR THESE PURPOSES OR HAVE TO BE MADE FROM FIELD MEASUREMENTS, TAKE THE NECESSARY MEASUREMENTS AND PREPARE THE DRAWINGS.

5. DRAWINGS ARE DIAGRAMMATIC IN NATURE AND DO NOT SHOW EVERY SYSTEM OFFSET REQUIRED. COORDINATE WITH THE EXISTING AND NEW STRUCTURE, ELECTRICAL, PLUMBING, FIRE PROTECTION AND CEILING TO PROVIDE OFFSETS AS REQUIRED AND APPROPRIATE.

CODES, INSPECTIONS, AND PERMITS:

1. PERFORM ALL WORK IN ACCORDANCE WITH THE CODES, REGULATIONS, AND LOCAL AMENDMENTS, AS CURRENTLY ADOPTED BY THE AUTHORITY HAVING JURISDICTION (AHJ).

2. IF ANY DISCREPANCIES ARE FOUND BETWEEN CONTRACT DOCUMENTS AND ANY APPLICABLE CODE OR LEGAL REQUIREMENT, SUBMIT AN RFI TO ENGINEER FOR DIRECTION BEFORE PROCEEDING.

3. OBTAIN ALL PERMITS AND INSPECTIONS, AND PAY FOR ALL UTILITY METERS AND UTILITY CONNECTIONS, REQUIRED BY THE AHJ FOR PROJECT COMPLETION.

WARRANTY:

1. UNCONDITIONALLY GUARANTEE ALL LABOR AND MATERIAL ON ALL WORK AGAINST DEFECTS IN WORKMANSHIP AND MATERIALS FOR A PERIOD OF ONE YEAR, FOLLOWING FINAL ACCEPTANCE, EXCEPT AS EXTENDED BY STANDARD MANUFACTURER WARRANTY AND/OR BY REQUIRED EXTENSION STATED IN THE CONTRACT DOCUMENTS.

SUBMITTALS AND SUBSTITUTIONS:

1. MEET THE CRITERIA DESCRIBED HEREIN, PRIOR TO ENGINEER'S REVIEW OF THE SUBMITTAL.

2. REFERENCE EQUIPMENT TAGS PROVIDED IN THE CONTRACT DOCUMENTS.

3. CLEARLY INDICATE THE INTENDED PRODUCT TYPE, MODE, OPTIONS, ACCESSORIES (FACTORY AND FIELD INSTALLED), AND ANY OTHER OPTIONS OF ANY KIND.

4. INDICATE THE PLAN ISSUANCE AND DATE ON WHICH SUBMITTAL IS BASED.

5. IF PROPOSING A SUBSTITUTION IN PLACE OF THE BASIS OF DESIGN EQUIPMENT, THE CONTRACTOR IS SOLELY RESPONSIBLE FOR THE SPATIAL REQUIREMENTS, ACOUSTICAL, THERMAL, PHOTOMETRIC, AND ELECTRICAL PERFORMANCE CHARACTERISTICS, AND COORDINATION OF ALL INSTALLATION REQUIREMENTS. REVIEW AND APPROVAL BY THE DESIGN TEAM DOES NOT ALTER OR MITIGATE THIS RESPONSIBILITY. CLEARLY MARK SUBSTITUTIONS AS SUCH.

6. DESCRIBE ANY IMPACT TO OTHER DIVISIONS CREATED BY A PRODUCT SUBSTITUTION ON THE SUBSTITUTION REQUEST FOR CONSIDERATION BY THE DESIGN TEAM. PROVIDE AN ESTIMATE OF ASSOCIATED COST IMPACT TO OTHER DIVISIONS WHERE APPLICABLE.

7. INDICATE WHERE PRODUCTS REQUIRE A PERFORMANCE DE-RATE DUE TO ALTITUDE EFFECTS.

8. RE-SUBMITTALS MUST CONTAIN MARKUPS THAT CLEARLY DELINEATE THE CHANGED ITEMS. ENGINEER WILL NOT RE-REVIEW THE ENTIRE SUBMITTAL PACKAGE IN ORDER TO FIND THE CHANGES.

9. ALL DATA REQUIRED FOR REVIEW MUST BE CONTAINED IN THE FILES PROVIDED TO THE ENGINEER. LINKS TO MANUFACTURER'S WEBSITES WILL NOT BE ACCEPTED.

10. ROOM SCHEDULES ARE ACCEPTABLE TO INDICATE QUANTITIES.

PROJECT CLOSEOUT REQUIREMENTS:

1. COMPLETE ALL REQUIRED AHJ INSPECTIONS. MAKE COPIES OF PERMITS AND INSPECTION REPORTS AVAILABLE.

2. PROVIDE A COMPLETE SET OF AS-BUILT PLANS AT THE COMPLETION OF THE PROJECT WITH ALL CHANGES NOTED.

3. CONDUCT A TRAINING SESSION FOR OWNER'S DESIGNATED STAFF FOR ALL CONTROLS SYSTEMS AND MAJOR EQUIPMENT. PRODUCE A SIGN IN SHEET FOR THIS SESSION SHOWING ATTENDEES, DATE, LIST OF EQUIPMENT AND SYSTEMS COVERED.

4. CLEAN JOB SITE OF ALL CONSTRUCTION DEBRIS, REPAIR ALL DAMAGED FINISHES. REMOVE ALL EXISTING EQUIPMENT LABELS THAT ARE NO LONGER ACCURATE, AND INSTALL NEW LABELING FOR NEW EQUIPMENT AND SYSTEMS.

5. DELIVER EQUIPMENT MANUALS AND ANY REQUIRED SPARE PARTS TO OWNER.

ACCESS AND CLEARANCES:

1. MAINTAIN ALL SERVICE AND ACCESS CLEARANCES REQUIRED BY CODE OR MANUFACTURER FOR ALL EQUIPMENT.

2. PROVIDE ACCESS FOR ALL EQUIPMENT, ETC. LOCATED ABOVE NON-ACCESSIBLE CEILINGS OR IN CONCEALED AREAS. PROVIDE SUFFICIENT ACCESS FOR SERVICING AND MAINTENANCE.

3. UTILIZE APPROPRIATELY RATED ACCESS PANELS WHEN PENETRATING A RATED ASSEMBLY.

PENETRATIONS AND RATED ASSEMBLIES:

1. THE ARCHITECTURAL PLANS SERVE AS THE REFERENCE FOR LOCATIONS OF RATED WALLS, PARTITIONS, AND ASSEMBLIES. COORDINATE ALL PENETRATIONS PRIOR TO ROUGH IN. FOR ALL PENETRATIONS OF FIRE RATED ASSEMBLIES, UTILIZE AN ASSEMBLY UL LISTED TO MAINTAIN THE RATING AND APPROVED BY ALL APPLICABLE CODES.

STRUCTURAL MODIFICATIONS:

1. DO NOT DRILL, NOTCH, CUT, OR ALTER STRUCTURAL MEMBERS IN ANY MANNER EXCEPT AS PERMITTED BY THE MATERIAL SPECIFIC SECTIONS OF THE BUILDING CODE, MANUFACTURER'S GUIDELINES FOR ENGINEERED PRODUCTS, OR THE RECOMMENDATION OF THE STRUCTURAL ENGINEER OF RECORD.

SUBSURFACE UTILITIES:

1. PROVIDE MEANS OF TRACING TO ALL UNDGROUND UTILITIES OUTSIDE THE BUILDING PERIMETER, IN COMPLIANCE WITH SUBSURFACE UTILITY ENGINEERING REGULATIONS.

2. PRIOR TO TRENCHING OR EXCAVATION, CONTACT UTILITY COMPANIES TO IDENTIFY UNDERGROUND UTILITIES AND LOCATE SECONDARY SERVICE FEEDERS, UNDERGROUND BRANCH CIRCUITS, GAS LINES, SPRINKLER LINES, ETC. ANY CUT OR DAMAGED UNDERGROUND SYSTEMS TO BE REPAIRED OR REPLACED AT CONTRACTOR'S EXPENSE.

EXISTING CONDITIONS AND DEMOLITION:

1. VISIT THE SITE AND BECOME FAMILIAR WITH EXISTING CONDITIONS TO THE EXTENT POSSIBLE BEFORE BEGINNING WORK. IF DISCREPANCIES ARE FOUND BETWEEN THE CONTRACT DOCUMENTS AND ACTUAL SITE CONDITIONS, SUBMIT AN RFI TO THE ARCHITECT OR ENGINEER FOR DIRECTION BEFORE PROCEEDING.

2. COORDINATE IN ADVANCE ALL WORK THAT AFFECTS EXISTING SYSTEMS OR OPERATIONS (SUCH AS SHUT DOWNS, TIE-INS, OR DEMOLITION), WITH THE BUILDING OWNER IN ADVANCE.

3. RETURN EXISTING EQUIPMENT NOTED AS TO BE REMOVED TO OWNER IN THE SAME CONDITION AS FOUND (EXCEPT WHERE CONTRACT DOCUMENTS CALL FOR DISPOSAL BY CONTRACTOR). COORDINATE DELIVERY AND STORAGE LOCATION WITH CONTRACTOR.

4. COORDINATE REPAIR OF ADJACENT CONSTRUCTION AND FINISHES DAMAGED OR EXPOSED DURING DEMOLITION WORK. MATCH EXISTING FINISHES, AND INCLUDE PAINT ON ENTIRE WALL OR ROOM IF REQUIRED TO MATCH COLOR.

5. X-RAY ANY SLAB PENETRATIONS PRIOR TO CORE DRILLING.

ADOPTED CODES

NEC	2023
IECC	2021
IBC	2024
IMC	2024
IFGC	2021
IPC	2021
LOCAL AMENDMENTS	ORDINANCE 008(D)
AHJ	MESA COUNTY

PLANSET BASED ON STRUCTURAL MODEL DATE: 5/18/2026

SITE ELEVATION REFERENCES:
4773.75 FT. ELEVATION = 100 FT. STRUCTURAL (T.O. SLAB) REFERENCE ELEVATION

ELECTRICAL SPECIFICATIONS

SCOPE AND PERFORMANCE OF WORK:

1. COORDINATE ALL LINE VOLTAGE WIRING AND CONDUIT SYSTEMS REQUIRED BY ALL DIVISIONS AND ENSURE THAT THEY ARE CAPTURED IN THE ELECTRICAL SUBCONTRACTOR'S SCOPE OF WORK. EVERY ATTEMPT WILL BE MADE TO REFLECT THESE REQUIREMENTS ON THE ELECTRICAL SHEETS, BUT ENSURE THAT THE ELECTRICAL SUBCONTRACTOR RECEIVES A COMPLETE DRAWING SET, AND UNDERSTANDS THE COMPLETE PROJECT SCOPE.

2. PROVIDE TEMPORARY CONSTRUCTION POWER AS REQUIRED BY THE GENERAL CONTRACTOR.

3. WHEN INSTALLING OR MODIFYING SERVICE OR METERING EQUIPMENT, COORDINATE WITH UTILITY COMPANY TO ENSURE THAT THEIR CURRENT STANDARDS ARE MET. IF ANY DISCREPANCY IS FOUND BETWEEN UTILITY STANDARDS AND CONTRACT DOCUMENTS, SUBMIT RFI TO ENGINEER FOR DIRECTION.

4. PROVIDE COMPLETE AND FUNCTIONAL ELECTRICAL AND LIGHTING SYSTEMS. INCLUDE ALL REQUIRED LABOR AND MATERIALS, REGARDLESS OF WHETHER SUCH MATERIALS ARE SPECIFICALLY CALLED OUT ON THE DRAWINGS, UNLESS THE DRAWINGS EXPLICITLY DESIGNATE CERTAIN ITEMS AS BEING PROVIDED BY OTHERS.

5. ELECTRICAL WORK SHALL BE PERFORMED IN A NEAT AND WORKMANLIKE MANNER, AS DEFINED BY THE NECA 1 STANDARD.

6. COORDINATE WITH OTHER TRADES FOR CUTTING, PATCHING, DRILLING, ROOF FLASHING, OR OTHER PENETRATION REQUIREMENTS CREATED BY ELECTRICAL WORK.

7. OBTAIN AND FOLLOW MANUFACTURER'S WIRING DIAGRAMS FOR ALL EQUIPMENT.

ELECTRICAL COMMISSIONING:

1. TEST ALL SCHEDULED EQUIPMENT AND WORK INDICATED AS NEW OR MODIFIED WITHIN THE PLANS AND SPECIFICATIONS. TESTING SERVICES SHALL BE SUFFICIENT TO DEMONSTRATE INTENDED OPERATING CONDITIONS AND FUNCTIONS.

ELECTRICAL SUBMITTAL REQUIREMENTS:

1. VERIFY THAT THE SUBMITTED DISTRIBUTION EQUIPMENT WILL ACCEPT THE SPECIFIED CONDUCTOR SIZES, EVEN WHEN CONDUCTORS ARE OVERSIZED TO MITIGATE VOLTAGE DROP. LUG KITS ARE ONLY ACCEPTABLE WHEN APPROVED BY THE EQUIPMENT MANUFACTURER.

2. GENERATOR SUBSTITUTION SUBMITTALS MUST INCLUDE LOAD CALCULATION SUMMARIES, INCLUDING LOAD TYPES, LOAD STEPS, OPERATING TEMPERATURE RANGE, AND ELEVATION DE-RATING.

IDENTIFICATION:

1. PROVIDE NEW TYPED SCHEDULES FOR ALL PANELS AFFECTED BY PROJECT. SCHEDULES SHALL CONTAIN ALL NEW CIRCUITING AS INSTALLED, AND ALL EXISTING CIRCUIT INFORMATION AVAILABLE. FOR EXAMPLE, IF A CIRCUIT WAS NOT MODIFIED IN THIS PROJECT, THE NEW PRINTED SCHEDULE SHOULD CONTAIN THE SAME TEXT AS THE EXISTING SCHEDULE. IF NO INFORMATION IS AVAILABLE, WRITE "UNKNOWN" IN THE SCHEDULE. PRINTING SCHEDULES FROM THE CONSTRUCTION DRAWING IS NOT ACCEPTABLE; RE-ATTACHING OLD SCHEDULES IS NOT ACCEPTABLE.

2. PROVIDE PERMANENT, ENGRAVED PLASTIC NAMEPLATES FOR ALL DISTRIBUTION EQUIPMENT REFLECTING THE NAMES SHOWN ON THE CONSTRUCTION DOCUMENTS. REMOVE ALL OLDER CONFLICTING LABELS.

3. PROVIDE ADHESIVE PRINTED PLASTIC LABELS FOR ALL RECEPTACLES, JUNCTION BOXES, AND DISCONNECT SWITCHES SHOWING PANEL AND CIRCUIT NUMBER (AND EQUIPMENT TAG IF APPLICABLE). IN FINISHED SPACES, LOCATE RECEPTACLE LABELS ON INSIDE OF FACEPLATE UNLESS DIRECTED OTHERWISE BY OWNER.

4. IDENTIFY ALL CONDUIT RUNS LONGER THAN SIX FEET, AND AT 50 FOOT INTERVALS.

5. INSTALL WARNING TAPE WITH ALL UNDERGROUND CONDUIT AND CABLE, AT 12" BELOW GRADE.

6. COLOR CODE ALL POWER CONDUCTORS USING FACTORY APPLIED COLORS. FOR 120/208 AND 240 SYSTEMS, USE BLACK/RED/BLUE FOR PHASES A/B/C. FOR 277/480 SYSTEMS, USE BROWN/ORANGE/YELLOW FOR PHASES A/B/C. FOR GROUNDED (NEUTRAL) CONDUCTORS USE WHITE OR GRAY. FOR GROUNDING CONDUCTORS USE GREEN. FOR ISOLATED GROUNDING CONDUCTORS USE GREEN WITH WHITE STRIPE.

7. USE ONLY PERMANENT LABELING METHODS. PENCIL, MASKING TAPE, OR PAPER TAPED TO SURFACES ARE NOT ACCEPTABLE. HAND WRITTEN LABELS ARE ONLY ACCEPTABLE FOR CONDUIT AND JUNCTION BOXES IN UNFINISHED AREAS, AND MUST BE PRINTED IN A NEAT AND LEGIBLE MANNER USING INK.

8. IN LOCATIONS EXPOSED TO SUNLIGHT, MOISTURE, OR CORROSIVE GASES, USE ONLY LABELING PRODUCTS RATED FOR THAT ENVIRONMENT AND GUARANTEED NOT TO FADE, DEGRADE, OR DETACH.

9. PROVIDE ALL REQUIRED SAFETY PLACARDS CONFORMING TO NEC STANDARDS.

RACEWAY AND CONDUCTORS:

1. ALL CONDUIT SIZES SHOWN ON DRAWINGS ARE MINIMUMS.

2. WHERE UNDERGROUND CONDUIT PASSES BELOW VEHICLE TRAFFIC AREAS, USE SCHEDULE 80 PVC. SCHEDULE 40 IS ACCEPTABLE IN OTHER UNDERGROUND AREAS.

3. WHERE EXTERIOR CONDUIT IS LOCATED BELOW 4' AFG, OR OTHERWISE EXPOSED TO DAMAGE, USE GALVANIZED RMC OR SCHEDULE 80 PVC.

4. ALL EXPOSED INTERIOR CONDUIT SHALL BE PVC OR RMC.

5. IN CORROSIVE ENVIRONMENTS, PROVIDE ALL CONDUIT WITH CORROSION PROTECTION.

6. FLEXIBLE METALLIC CABLE (MC) AND FLEXIBLE NONMETALLIC CABLE (AKA "ROMEX") ARE NOT ACCEPTABLE IN ANY LOCATION UNLESS EXPLICITLY ALLOWED ON DRAWING OR RFI RESPONSE.

7. USE ONLY CONDUIT SUPPORT DEVICES RATED FOR THE SPECIFIC APPLICATION. VERIFY THE ADEQUACY OF ALL CUSTOM SUPPORT STRUCTURES FOR CONDUIT. DESIGN CUSTOM SUPPORT STRUCTURES TO SUPPORT 125% OF THE ACTUAL WEIGHT OF THE STRUCTURE AND ITS CONTENTS.

BRANCH CIRCUITS AND DEVICES:

1. PROVIDE DEDICATED NEUTRAL CONDUCTORS FOR ALL CIRCUITS, OF SAME SIZE AS PHASE CONDUCTOR(S). SHARED NEUTRALS ARE NOT ACCEPTABLE.

2. DETERMINE THE MOST EFFICIENT GROUPING OF HOME RUNS IN THE FIELD, AND COMPLY WITH RESULTING CONDUIT FILL AND WIRE DERATING REQUIREMENTS.

3. GFCI OUTLETS SHALL INCLUDE INDICTOR LIGHTS THAT ILLUMINATE WHEN TRIPPED.

4. IN FINISHED SPACES, PROVIDE MATCHING FACEPLATES, DEVICES, AND SCREW HEADS (COLOR AND STYLE AS DIRECTED BY ARCHITECT). IN UNFINISHED SPACES, PROVIDE GALVANIZED STEEL FACEPLATES.

5. WHERE WEATHERPROOF DEVICE COVERS ARE REQUIRED, USE ONLY HEAVY DUTY, WHILE-IN-USE TYPE.

6. MOUNT ALL OUTDOOR RECEPTACLES WITH BOTTOM OF ENCLOSURE AT LEAST 16" ABOVE FINISHED GRADE.

GROUNDING AND BONDING:

1. INSTALL WIRE-TYPE EQUIPMENT GROUNDING CONDUCTORS WITH ALL FEEDERS AND ALL BRANCH CIRCUITS. CONDUIT IS NOT AN ACCEPTABLE EQUIPMENT GROUNDING MEANS UNLESS EXPLICITLY ALLOWED IN CONSTRUCTION DRAWINGS FOR A PARTICULAR LOCATION.

2. IF A LIGHT POLE STRUCTURE IS SUPPLIED BY ONLY A SINGLE BRANCH CIRCUIT, A SEPARATE GROUNDING ELECTRODE (ROD) IS NOT REQUIRED. BOND THE EQUIPMENT GROUNDING CONDUCTOR OF THE SUPPLY CIRCUIT TO POLE BASE REBAR AND EXPOSED METALLIC POLE COMPONENTS. IF THE POLE STRUCTURE IS SUPPLIED BY MULTIPLE BRANCH CIRCUITS, INSTALL AN 8 FT GROUND ROD AT THE POLE, AND BOND IT TO POLE BASE REBAR, EXPOSED METALLIC POLE COMPONENTS, AND EQUIPMENT GROUNDING CONDUCTORS OF ALL SUPPLY CIRCUITS. KEEP NEUTRALS ISOLATED IN BOTH CASES.

3. BOND FENCES ENCLOSING TRANSFORMERS, GENERATORS, OR SOLAR/WIND GENERATION EQUIPMENT TO THE GROUNDING ELECTRODE(S) ASSOCIATED WITH THE EQUIPMENT.

4. FOR ALL GROUNDING AND BONDING CONNECTIONS, USE ONLY PRODUCTS UL LISTED FOR THE SPECIFIC APPLICATION, MATERIALS, AND ENVIRONMENT INVOLVED.

5. BOND SERVICE ENTRANCE GROUNDING ELECTRODE SYSTEMS TO AVAILABLE METALLIC PIPE, EXPOSED METAL STRUCTURE, REBAR, ETC AS REQUIRED BY THE NEC.

EXACT LOCATIONS:

1. ELECTRICAL PLANS ARE DIAGRAMMATIC EXCEPT WHERE SPECIFIC DIMENSIONAL REQUIREMENTS ARE CALLED OUT ON PLAN. COORDINATE EXACT PLACEMENT OF EQUIPMENT AND ROUTING OF CONDUIT.

2. COORDINATE THE EXACT LOCATIONS OF EQUIPMENT PRIOR TO ROUGH IN OF ELECTRICAL CONNECTIONS.

3. IF DISCREPANCIES ARE FOUND IN EQUIPMENT LOCATIONS BETWEEN ARCHITECTURAL AND ELECTRICAL PLANS, SUBMIT RFI FOR DIRECTION BEFORE PROCEEDING.

ELECTRICAL SYMBOL LEGEND

SINGLE LINE DIAGRAM SYMBOLS

- CIRCUIT BREAKER
- FUSE
- DISCONNECT SWITCH
- NT — NEUTRAL BUS
- GR — GROUND BUS
- BOND
- GROUNDING ELECTRODE (SEE KEYNOTE FOR TYPE)
- VFD — VARIABLE FREQUENCY DRIVE
- M — METER

LIGHTING FIXTURES

- GENERAL LIGHT FIXTURE DRAWN TO APPROX. SIZE AND SHAPE

LIGHT FIXTURE SYMBOL MODIFIERS:

- HALF FILL INDICATES EMERGENCY BACKUP
- SIDE LINES INDICATE WALL MOUNTING

EXIT AND EGRESS TYPES:

- EXIT SIGN FILLED QUARTERS INDICATE FACES
- EXIT SIGN WITH INTEGRAL LIGHTS
- DEDICATED EMERGENCY LIGHT

CONTROL DEVICES

- $a — WALL SWITCH LOWER CASE LETTER INDICATES CONTROL ZONE
- $3a — THREE WAY SWITCH
- EPO — EMERGENCY POWER OFF BUTTON

ANNOTATION SYMBOLS

- ## — KEYNOTE TAG
- ## — REVISION TAG
- AA-#-### — ELECTRICAL EQUIPMENT TAG REFER TO EQUIPMENT SCHEDULE
- AA-#-### — ELECTRICAL CONNECTION TAG (EQUIPMENT SPECIFIED BY OTHERS) REFER TO CONNECTION SCHEDULE
- A### — FEEDER TAG REFER TO FEEDER SCHEDULE
- AA - #,#,# — CIRCUIT TAG REFER TO PANEL SCHEDULE
- A##a — LIGHTING FIXTURE TAG UPPERCASE TAG IS FIXTURE TYPE LOWERCASE LETTER IS SWITCH ID

RECEPTACLES

- STANDARD WALL MOUNTED DUPLEX RECEPTACLE

RECEPTACLE SYMBOL MODIFIERS:

- CROSS LINES INDICATE QUADRUPLEX
- SINGLE LINE INDICATES SIMPLEX
- TRIANGLE INDICATES SPECIAL NEMA TYPE (SEE KEYNOTES)
- CENTER FILL INDICATES ABOVE COUNTER (6" TO BOTTOM)
- G — "G" INDICATES PROVIDE GFCI PROTECTION AT DEVICE OR BREAKER
- W — "W" INDICATES WEATHERPROOF IN-USE COVER AND GFCI PROTECTION

ELECTRICAL SHEET LIST

Sheet Number	Sheet Name
E1	ELECTRICAL LEGEND AND GENERAL NOTES
E2	ELECTRICAL SITE PLAN
E3	ELECTRICAL PLAN
E4	SCHEDULES AND SINGLE LINE DIAGRAM
E5	2021 IECC COMPLIANCE

SGM
118 West Sixth Street, Suite 200
Glenwood Springs, CO 81601
970.945.1004
www.sgm-inc.com

NOT FOR CONSTRUCTION

Desert Road Pump Station
PARCEL #2969-303-00-333
GRAND JUNCTION, CO 81501

#	Description:	Date:	By:

Project Milestone: BID SET

Job No.	2025-354.002
Drawn by:	ED
Print Date:	7/17/26
QC:	AH | PE: AH
File:	DesertRdPS_ME_R25.rvt

Title: ELECTRICAL LEGEND AND GENERAL NOTES

Dwg No. E1

Central Model: I:\2025\2025-354-CitiesWaterOnCallEngrg\02-Desert Rd Pump Station\4-Dwgs\Mep\Revit\DesertRdPS_ME_R25.rvt
7/22/2026 11:50:23 AM
Autodesk Docs://Desert Rd PS/DesertRdPS_ME_R23.rvt

KEYNOTES	
1	ROUTING OF SERVICE LATERAL IS APPROXIMATE, FIELD COORDINATE EXACT ROUTING WITH GRAND VALLEY POWER PRIOR TO TRENCHING.
2	FIELD COORDINATE INSTALLATION OF NEW POLE-MOUNTED, 480Y/277V SERVICE TRANSFORMER BANK WITH GRAND VALLEY POWER.

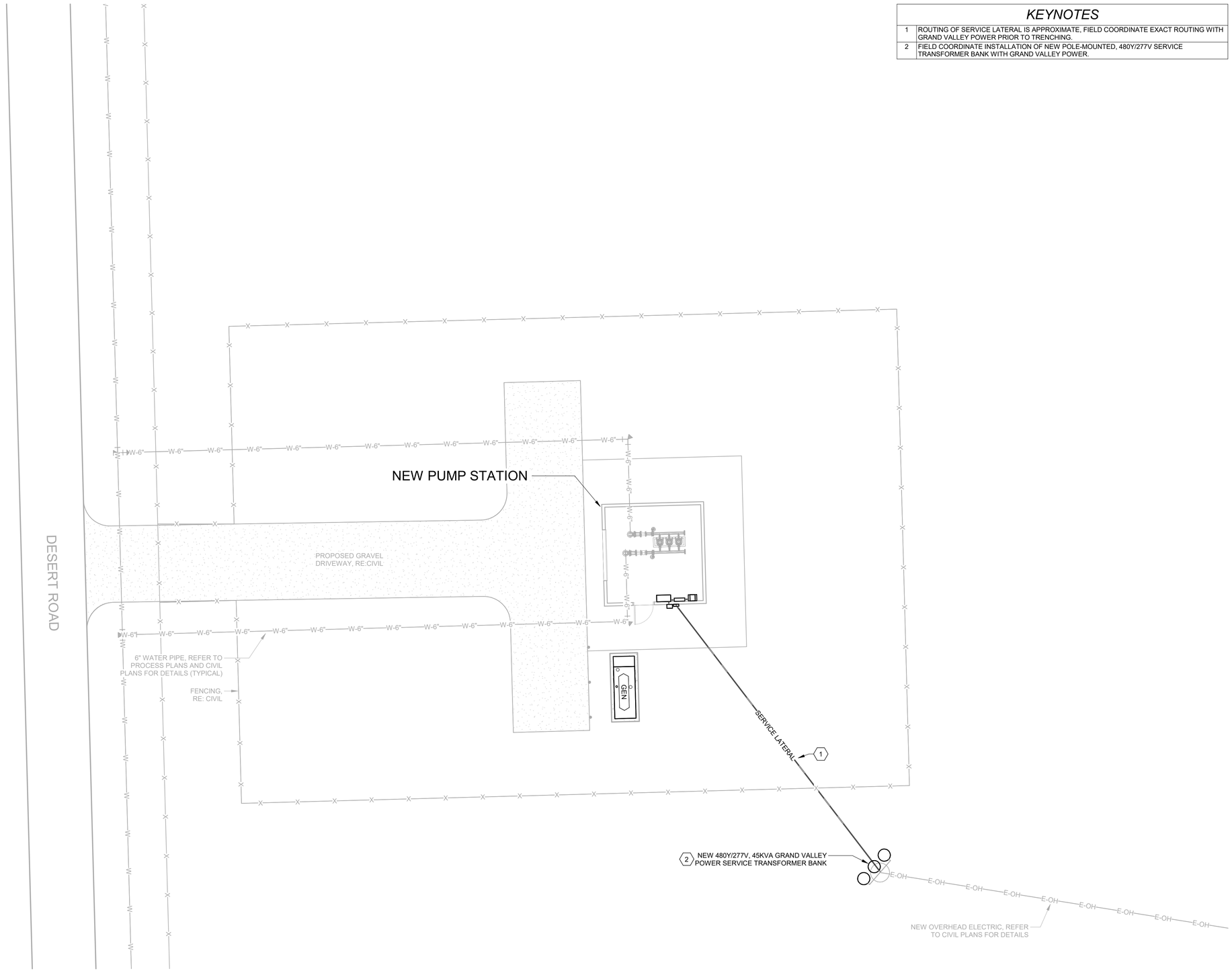

NORTH

1 ELECTRICAL SITE PLAN

SCALE: 1/8" = 1'-0"

SGM
118 West Sixth Street, Suite 200
Glenwood Springs, CO 81601
970.945.1004
www.sgm-inc.com

NOT FOR CONSTRUCTION

Desert Road Pump Station
PARCEL #2969-303-00-333
GRAND JUNCTION, CO 81501

#	Description:	Date:	By:

Project Milestone: BID SET

Job No.	2025-354.002
Drawn by:	ED
Print Date:	7/17/26
QC: AH	PE: AH
File:	DesertRdPS_ME_R25.rvt

Title: ELECTRICAL SITE PLAN

Dwg No. E2

Central Model: I:\2025\2025-354-CitiesWaterOnCallEngr\02-Desert Rd Pump Station\4-Dwgs\Map\Revit\DesertRdPS_ME_R25.rvt
7/22/2026 11:20:23 AM
Autodesk Docs://Desert Rd PS/DesertRdPS_ME_R25.rvt

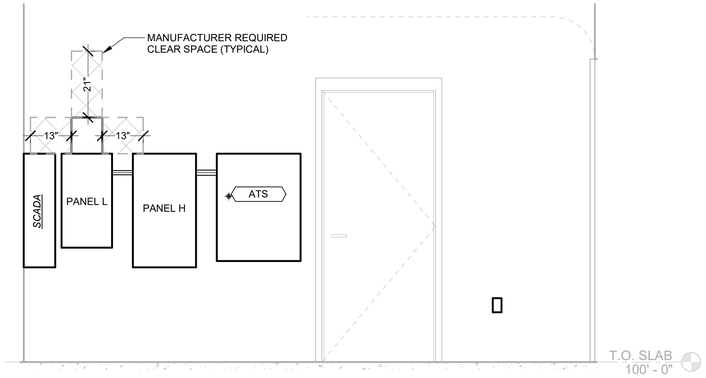

2 INTERIOR EQUIPMENT ELEVATION

SCALE: 1/2" = 1'-0"

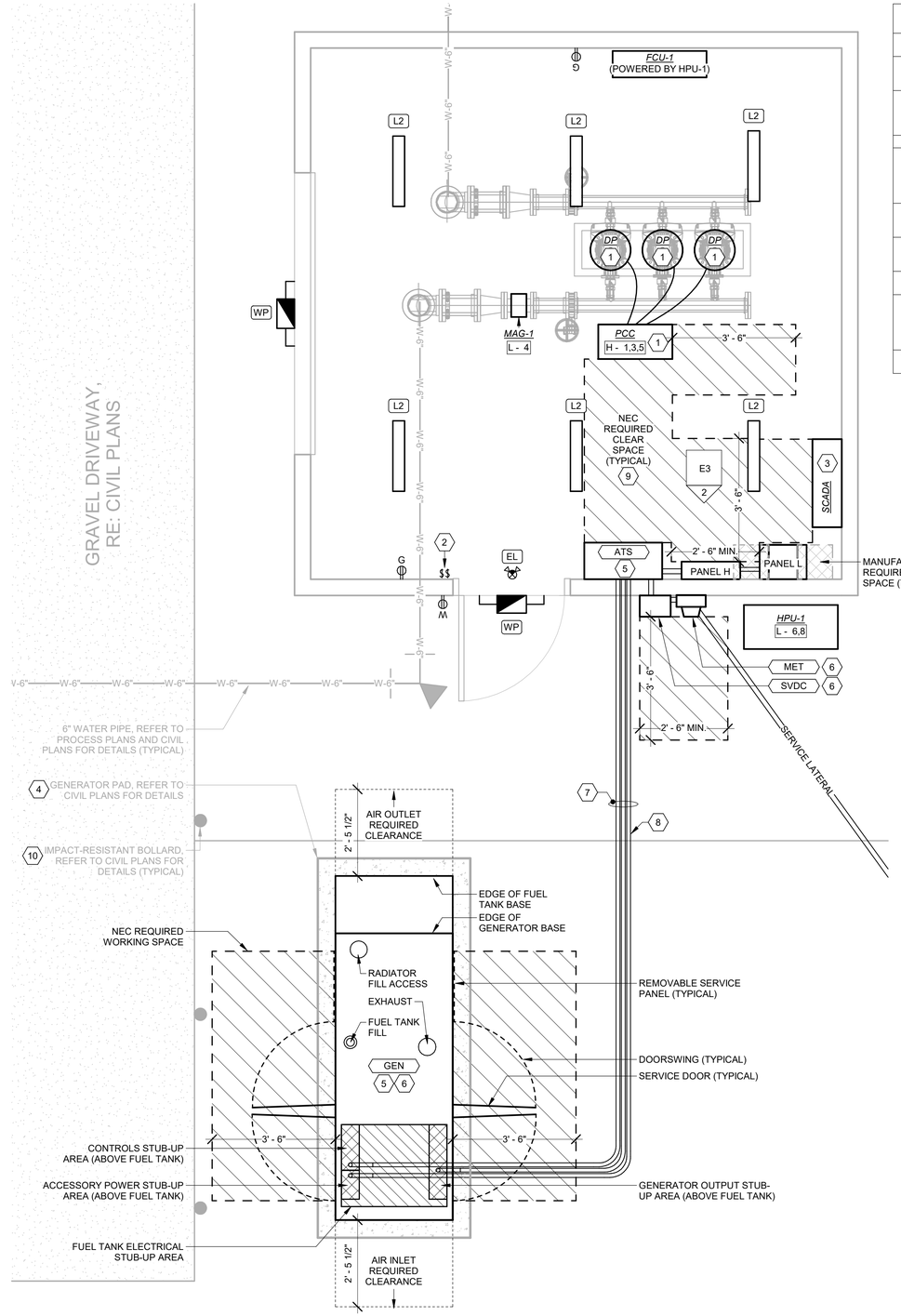

1 ELECTRICAL MAIN FLOOR PLAN

SCALE: 1/2" = 1'-0"

KEYNOTES

1	ROUTE POWER AND CONTROL CONDUIT FOR PUMPS THROUGH FLOOR SLAB, DO NOT DROP FROM OVERHEAD.
2	PROVIDE TWO LIGHT SWITCHES AT DOOR, ONE CONTROLLING ALL INTERIOR FIXTURES AND THE OTHER CONTROLLING EXTERIOR BUILDING MOUNTED FIXTURES (EXTERIOR FIXTURES INCLUDE INTEGRAL PHOTOCELLS AND MOTION SENSORS).
3	SCADA SYSTEM TO BE DESIGNED AND PROVIDED BY DISTRICT'S INTEGRATOR. PROVIDE POWER TO SCADA PANEL AND ALL NECESSARY CONTROLS CONDUIT AS DIRECTED BY INTEGRATOR, REFER TO INSTRUMENTATION PLANS FOR ADDITIONAL INFORMATION.
4	PROVIDE GENERATOR PAD PER CIVIL DETAIL.
5	PROVIDE NEW LEGALLY REQUIRED PERMANENT STANDBY GENERATOR AND ATS. THE LAYOUT, DETAILS, AND CONNECTIONS SHOWN REPRESENT A PRODUCT (CUMMINS C50D6C) USED AS A BASIS OF DESIGN FOR SITE PLANNING PURPOSES. CONTRACTOR IS RESPONSIBLE FOR ADJUSTING THE LAYOUT TO COORDINATE WITH THE ACTUAL GENERATOR PRODUCT BEING SUPPLIED.
6	GRADE MUST BE AS FLAT AND LEVEL AS PRACTICAL FOR THE ENTIRE WIDTH AND DEPTH OF THE EQUIPMENT'S WORKING SPACE PER NEC 110.26(A)(6), REFER TO CIVIL PLANS FOR GRADING DETAILS.
7	IN COMMON TRENCH, PROVIDE GENERATOR OUTPUT POWER, INCOMING ACCESSORY POWER, AND CONTROLS FROM ATS. REFER TO SINGLE LINE DIAGRAM AND FEEDER SCHEDULE FOR DETAILS.
8	COORDINATE ACTUAL GENERATOR ACCESSORY FEEDER/BRANCH CIRCUIT(S) WITH THE REQUIREMENTS OF THE ACTUAL GENERATOR PRODUCT BEING SUPPLIED.
9	FIELD COORDINATE EXACT LOCATION FOR ELECTRICAL EQUIPMENT. MAINTAIN CLEAR WORKING SPACE IN FRONT OF ALL ELECTRICAL EQUIPMENT AS REQUIRED BY NEC 110.26(A). MAINTAIN DEDICATED EQUIPMENT SPACE ABOVE AND BELOW SERVICE EQUIPMENT, SWITCHBOARDS, SWITCHGEAR, PANELBOARDS, AND MOTOR CONTROL CENTERS AS REQUIRED BY NEC 110.26(E).
10	FIELD COORDINATE GENERATOR POSITIONING WITH CIVIL PLANS TO ENSURE BOLLARDS ARE NOT PLACED IN FRONT OF SERVICE DOORS.

SGM
118 West Sixth Street, Suite 200
Glenwood Springs, CO 81601
970.945.1004
www.sgm-inc.com

NOT FOR CONSTRUCTION

Desert Road Pump Station
PARCEL #2969-303-00-333
GRAND JUNCTION, CO 81501

#	Description:	Date:	By:

Project Milestone: BID SET

Job No.	2025-354.002
Drawn by:	ED
Print Date:	7/17/26
QC:	AH | PE: AH
File:	DesertRdPS_ME_R25.rvt

Title: ELECTRICAL PLAN

Dwg No. E3

Central Model: I:\2025\2025-354-CitiesWaterOnCallEngin\02-Desert Rd Pump Station\4-Dwgs\Mep\Revit\DesertRdPS_ME_R25.rvt
7/22/2026 11:20:23 AM
Autodesk Docs://Desert Rd PS/DesertRdPS_ME_R25.rvt

ELECTRICAL CONNECTION SCHEDULE

REMARKS:
1. For equipment specification/detail, see drawing set indicated in "refer to" column.
2. Also provide controls conduit as directed by District's integrator.
3. Confirm neutral requirements with equipment manufacturer installation instructions.
4. Refer to PCC shop drawings for individual pump loads and integral pump OCPD.

TAG	DESCRIPTION	REFER TO	CB SIZE	CONDUCTORS / CONDUIT	DISCONNECT	VOLTS	PHASE	VA	REMARKS
DP	10 HP PUMP (POWERED BY PCC)	PROCESS PLANS	0 A	PROVIDE PER MANUFACTURER	INTEGRAL TO PCC	480 V	3	0 VA	1, 2, 4
FCU-1	FAN COIL UNIT (POWERED BY HEAT PUMP)	MECHANICAL PLANS	0 A	PROVIDE PER MANUFACTURER	CB WITHIN SIGHT	240 V	1	0 VA	1, 3
HPU-1	AIR SOURCE HEAT PUMP	MECHANICAL PLANS	20 A	(3) #12 CU + #12 CU EGC IN 1.0" PVC CONDUIT	PROVIDE UNFUSED NEMA 3R DISCO.	240 V	1	3840 VA	1, 3
MAG-1	MAGNETIC FLOW METER	PROCESS PLANS	15 A	(2) #12 CU + #12 CU EGC IN 1.0" PVC CONDUIT	CB WITHIN SIGHT	120 V	1	50 VA	1, 2
PCC	PUMP CONTROL PANEL	PROCESS PLANS	60 A	(4) #6 CU + #10 CU EGC IN 1.0" PVC CONDUIT	CB WITHIN SIGHT	480 V	3	37828 VA	1, 2, 3
SCADA	CONTROL CABINET POWER SUPPLY	OWNER'S INTEGRATOR	20 A	(2) #12 CU + #12 CU EGC IN 1.0" PVC CONDUIT	CB WITHIN SIGHT	120 V	1	500 VA	1, 2

ELECTRICAL EQUIPMENT SCHEDULE

REMARKS:
1. Install meter socket furnished by Grand Valley Power, shown here for reference only.
2. Generator size requirement is defined by load steps and starting requirements listed in specifications (not nameplate rating).
3. Refer to specifications section for full requirements.
4. Provide selective coordination report complying with the requirements of NEC 701.32 for legally required standby systems.

TYPE	DESCRIPTION	AMPACITY	VOLTS	PHASE	ENCLOSURE	MOUNTING	REMARKS
PANEL L	COMBINATION 10KVA, 480:240V STEP-DOWN TRANSFORMER AND PANELBOARD, SQUARE D MINI POWER ZONE: MPU10S40F OR APPROVED EQUAL	60 A	240 V	1	NEMA 1	SURFACE	4
ATS	3-POLE AUTOMATIC TRANSFER SWITCH, 3-PHASE WITH SOLID NEUTRAL, DELAYED TRANSITION	60 A	480 V	3	NEMA 1	SURFACE	3, 4
GEN	PERMANENT STANDBY DIESEL GENERATOR WITH SUB-BASE FUEL TANK (LEGALLY REQUIRED STANDBY)	75 A	480 V	3	NEMA 3R	PAD	2, 3, 4
MET	METER SOCKET	100 A	480 V	3	NEMA 3R	SURFACE	1
SVDC	SERVICE-ENTRANCE RATED DISCONNECT, FUSED AT 60A	60 A	480 V	3	NEMA 3R	SURFACE	4

KEYNOTES

1	PROVIDE NEW SERVICE GROUNDING ELECTRODE CONSISTING OF TWO 0.75" X 10' COPPER CLAD STEEL GROUND RODS SPACED AT LEAST 20' APART, BONDED TOGETHER, AND DRIVEN WITH TOPS AT LEAST 30" BELOW GRADE. BOND TO OTHER AVAILABLE ELECTRODES PER NEC REQUIREMENTS.
2	COORDINATE ACTUAL GENERATOR ACCESSORY FEEDER/BRANCH CIRCUIT(S) WITH THE REQUIREMENTS OF THE ACTUAL GENERATOR PRODUCT BEING SUPPLIED.
3	PROVIDE NEW LEGALLY REQUIRED PERMANENT STANDBY GENERATOR AND ATS. THE LAYOUT, DETAILS, AND CONNECTIONS SHOWN REPRESENT A PRODUCT (CUMMINS C50D6C) USED AS A BASIS OF DESIGN FOR SITE PLANNING PURPOSES. CONTRACTOR IS RESPONSIBLE FOR ADJUSTING THE LAYOUT TO COORDINATE WITH THE ACTUAL GENERATOR PRODUCT BEING SUPPLIED.
4	PROVIDE SELECTIVE COORDINATION REPORT FOR THIS EQUIPMENT MEETING THE REQUIREMENTS OF NEC 701.32 FOR LEGALLY REQUIRED STANDBY SYSTEMS.

FEEDER SCHEDULE

TAG	FEEDER
#4F	1 Set of [(4) #4 AL + #8 AL EGC IN 1.25" CONDUIT]
#4S	1 Set of [(4) #4 AL + #6 AL SSBJ IN 1.25" CONDUIT]
#10F	1 Set of [(3) #10 CU + #10 CU EGC IN 1.0" PVC CONDUIT]
GEC	#6 CU (PROTECTED WHERE EXPOSED)
RTS	REFER TO ELECTRICAL CONNECTION SCHEDULE

PANEL SCHEDULE: H

Enclosure: NEMA 1 **Mounting:** SURFACE
Volts: 480/277 Wye **Phases:** 3 **Wires:** 4
A.I.C. Rating: 10,000 **Mains Type:** MCB **Mains Rating:** 100 A

Notes:
*Provide surge protection device (SPD).

CKT	Circuit Description	Trip	Pole	A	A	B	B	C	C	Pole	Trip	Circuit Description	CKT
1	Pump Control Panel, PCC	60 A	3	12609	3939					2	30 A	PANEL L (Step-down Prim.)	2
3	--	--	--			12609	2656			--	--	--	4
5	--	--	--					12609					6
7													8
9													10
11													12
13	Surge Protection Device*	30 A	3	0									14
15	--	--	--			0							16
17	--	--	--					0					18
			Total Load:	16549 VA		15265 VA		12609 VA					
	LEGEND:		Total Amps:	61 A		57 A		46 A					

[GF] = GFCI BREAKER [LK] = LOCKABLE OFF

Load Classification	Connected Load	Factor	Demand	Panel Totals	
HVAC	3840 VA	100.00%	3840 VA		
Receptacle	540 VA	100.00%	540 VA	**Total Conn. Load:**	44423 VA
Lighting	170 VA	125.00%	213 VA	**Total Demand:**	44839 VA
Controls Equipment	550 VA	100.00%	550 VA	**Total Conn.:**	53 A
Generator Accessory Allowance	1500 VA	125.00%	1875 VA	**Total Demand:**	54 A
Pump System (Incl. Largest Motor @ 125%)	37828 VA	100.00%	37828 VA		

PANEL SCHEDULE: L

Enclosure: NEMA 1 **Mounting:** SURFACE
Volts: 120/240 Single **Phases:** 1 **Wires:** 3
A.I.C. Rating: 10,000 **Mains Type:** MCB **Mains Rating:** 60 A

Notes:
*Coordinate exact quantity and sizing of generator accessory circuit(s) with specific generator product being supplied.

CKT	Circuit Description	Trip	Pole	A	A	B	B	Pole	Trip	Circuit Description	CKT
1	Lgt - Exterior	20 A	1	20	500			1	20 A	SCADA Cabinet	2
3	Lgt - Interior	20 A	1			150	50	1	20 A	MAG-1, Magnetic Flow Meter	4
5	Generator Accessories*	20 A	1	1500	1920			2	20 A	HPU-1/FCU-1, Heat Pump/Fan Coil	6
7	Spare	20 A	1			0	1920	--	--	--	8
9	Spare	20 A	1	0							10
11	Receptacles [GF]	20 A	1			540					12
13	Spare [GF]	20 A	1	0							14
15	Spare [GF]	20 A	1			0					16
			Total Load:	3939 VA		2656 VA					
	LEGEND:		Total Amps:	33 A		22 A					

[GF] = GFCI BREAKER [LK] = LOCKABLE OFF

Load Classification	Connected Load	Factor	Demand	Panel Totals	
HVAC	3840 VA	100.00%	3840 VA		
Receptacle	540 VA	100.00%	540 VA	**Total Conn. Load:**	6595 VA
Lighting	170 VA	125.00%	213 VA	**Total Demand:**	7011 VA
Controls Equipment	550 VA	100.00%	550 VA	**Total Conn.:**	27 A
Generator Accessory Allowance	1500 VA	125.00%	1875 VA	**Total Demand:**	29 A

SINGLE LINE DIAGRAM GENERAL NOTES:

1. THIS DIAGRAM IS SCHEMATIC, AND IS NOT INTENDED TO SPECIFY CONDUIT ROUTING OR FEED SIDE OF PANELS. THE CONTRACTOR IS RESPONSIBLE FOR DETERMINING THE MOST EFFICIENT ROUTING OF FEEDERS AND ORDERING EQUIPMENT ACCORDINGLY.
2. REFER TO PANEL SCHEDULES FOR EQUIPMENT SIZING AND RATINGS.
3. REFER TO FEEDER SCHEDULE FOR FEEDER SIZING.

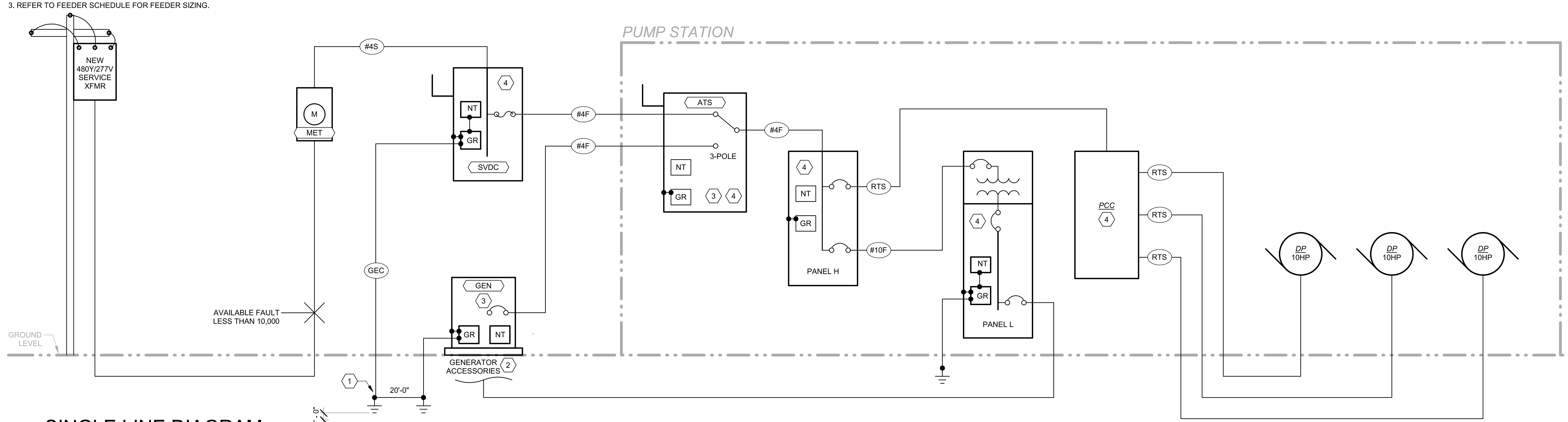

1 SINGLE LINE DIAGRAM
NO SCALE

SGM
118 West Sixth Street, Suite 200
Glenwood Springs, CO 81601
970.945.1004
www.sgm-inc.com

NOT FOR CONSTRUCTION

Desert Road Pump Station
PARCEL #2969-303-00-333
GRAND JUNCTION, CO 81501

#	Description:	Date:	By:

Project Milestone: BID SET

Job No. 2025-354.002
Drawn by: ED
Print Date: 7/17/26
QC: AH | PE: AH
File: DesertRdPS_ME_R25.rvt

Title:
SCHEDULES AND SINGLE LINE DIAGRAM

Dwg No.
E4

Exterior Lighting Compliance Certificate

Allowed Exterior Lighting Power

A Area/Surface Category	B Quantity	C Allowed Watts / ft2	D Tradable Wattage	E Allowed Watts (B X C)
Ped. Entrance (Pedestrian and vehicular entrances and exits)	3 ft of door width	14.00	No	42.0
Overhead Door (Pedestrian and vehicular entrances and exits)	8 ft of door width	14.00	No	112.0
Gravel Driveway (Driveway)	1474 ft2	0.03	No	44.22
Total Tradable Watts (a):				198.22
Base Site Allowance (b):				350
Total Allowed Watts:				548.22

(a) Wattage tradeoffs are only allowed between tradable areas/surfaces.
(b) A base site allowance equal to 400 watts may be applied toward compliance of both non-tradable and tradable areas/surfaces.

Proposed Exterior Lighting Power

A Fixture ID : Description / Lamp / Wattage Per Lamp / Ballast	B # of Fixture	C Fixture Watt.	D (B X C)
Ped. Entrance (Pedestrian and vehicular entrances and exits, 3 ft of door width): Tradeable Wattage			
WP: WP: LED:	1	10	10
Overhead Door (Pedestrian and vehicular entrances and exits, 8 ft of door width): Tradeable Wattage			
WP: WP: LED:	1	10	10
Gravel Driveway (Driveway, 1474 ft2): Tradeable Wattage			
Total Tradable Proposed Watts:			20

Proposed Exterior Lighting Controls

Fixture	Lighting Control
Ped. Entrance (Pedestrian and vehicular entrances and exits, 3 ft of door width)	
WP: WP: LED:	Daylight Shutoff
Overhead Door (Pedestrian and vehicular entrances and exits, 8 ft of door width)	
WP: WP: LED:	Daylight Shutoff
Gravel Driveway (Driveway, 1474 ft2)	

Exterior Lighting PASSES: Design 96% better than code

Exterior Lighting Compliance Statement

Compliance Statement: The proposed exterior lighting design represented in this document is consistent with the building plans, specifications, and other calculations submitted with this permit application. The proposed exterior lighting systems have been designed to meet the 2021 IECC requirements in COMcheckWeb and to comply with any applicable mandatory requirements listed in the Inspection Checklist.

Name - Title	Signature	Date
Amber Haymes		7/15/2026

Interior Lighting Compliance Certificate

Project Information

Energy Code: 2021 IECC
Project Title: Desert Road Pump Station
Location: Orchard Mesa, Colorado
Climate Zone: 5b
Project Type: New Construction

Construction Site:
Parcel #2959-303-00-333
Grand Junction , Colorado 81501

Owner/Agent:
Clifton Water District
Colorado

Designer/Contractor:
SGM
118 W 6th St
Glenwood Springs , Colorado 81601

Allowed Interior Lighting Power

A Area Category	B Floor Area (ft2)	C Allowed Watts / ft2	D Allowed Watts
1-Pump Station (Manufacturing:Equipment Room)	228	0.76	173
Total Allowed Watts:			187

Proposed Interior Lighting Power

A Fixture ID : Description / Lamp / Wattage Per Lamp / Ballast	B # of Fixture	C Fixture Watt.	D (B X C)
1-Pump Station (Manufacturing:Equipment Room)			
L2: L2: LED:	6	25	150
EL: EL: LED:	1	3	Exempt
Exemption:Exit signs			
Total Proposed Watts:			150

Proposed Interior Lighting Controls

Fixture	Lighting Control
1-Pump Station (Manufacturing:Equipment Room)	
L2: L2: LED:	Manual Control
EL: EL: LED:	Manual Control

Interior Lighting PASSES: Design 20% better than code

Interior Lighting Compliance Statement

Compliance Statement: The proposed interior lighting design represented in this document is consistent with the building plans, specifications, and other calculations submitted with this permit application. The proposed interior lighting systems have been designed to meet the 2021 IECC requirements in COMcheckWeb and to comply with any applicable mandatory requirements listed in the Inspection Checklist.

Name - Title	Signature	Date
Amber Haymes		7/15/2026

SGM
118 West Sixth Street, Suite 200
Glenwood Springs, CO 81601
970.945.1004
www.sgm-inc.com

NOT FOR CONSTRUCTION

Desert Road Pump Station
PARCEL #2969-303-00-333
GRAND JUNCTION, CO 81501

#	Description:	Date:	By:

Project Milestone: BID SET

Job No.	2025-354.002
Drawn by:	ED
Print Date:	7/17/26
QC: AH	PE: AH
File:	DesertRdPS_ME_R25.rvt

Title: 2021 IECC COMPLIANCE

Dwg No. E5

Central Model: I:\2025\2025-354-CliftonWaterDistCall\Engin\02-Desert Rd Pump Station\4-Dwgs\Mep\Revit\DesertRdPS_ME_R25.rvt
7/22/2026 11:20:23 AM
Autodesk Docs://Desert Rd PS/DesertRdPS_ME_R25.rvt

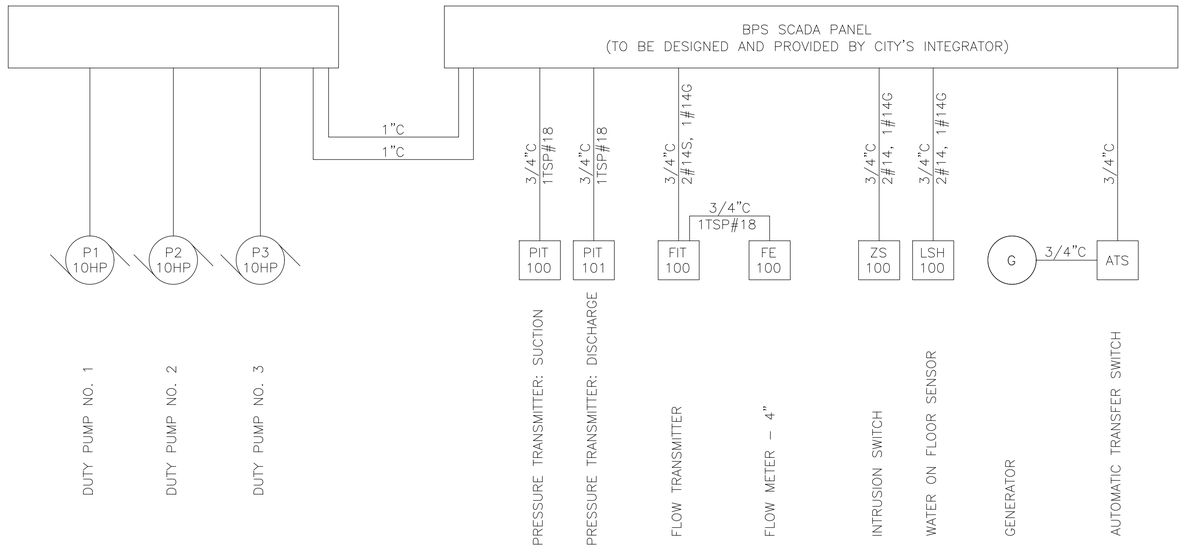

I/O LIST		
COMPONENT	EQUIPMENT	I/O
PUMP CONTROL PANEL	PRESSURE TRANSMITTER	PRESSURE TRANSMITTER ON SUCTION HEADER
	PRESSURE TRANSMITTER	PRESSURE TRANSMITTER ON DISCHARGE HEADER
	LEVEL SENSOR	CARDIFF TANK LEVEL
	MAGNETIC FLOW METER	INSTANTANEOUS RATE OF FLOW
	PUMP FEEDBACK	RUN & FAULT STATUS
PROCESS	MAGNETIC FLOW METER – 4"	INSTANTANEOUS RATE OF FLOW
		TOTALIZED FLOW
	BOOSTERPAQ SKID	FEEDBACK FROM SKID
	SCADA PANEL	TBD BY CITY INTEGRATOR
BUILDING	MAN DOOR	INTRUSION CONTACT
	LEAK DETECTION	WATER ON FLOOR CONTACT
POWER	GENERATOR	FAULT CONTACT
		LOW FUEL CONTACT
		STATUS CONTACT
	TRANSFER SWITCH	GENERATOR CONTACT
		UTILITY CONTACT
NOTE: SCADA PANEL TO INCORPORATE SIGNAL SPLITTER FOR EACH SHARED ANALOG SIGNAL		

NOTES:
1. CONTRACTOR SHALL INSTALL CONTROLS CONDUITS AS SHOWN W/PULL-STRINGS.
2. THE CITY'S INTEGRATOR WILL BUILD AND INSTALL SCADA PANEL.
3. CONTRACTOR SHALL COORDINATE W/INTEGRATOR AS NEEDED TO FACILITATE CONTROLS CONNECTIONS.

SGM
118 West Sixth Street, Suite 200
Glenwood Springs, CO 81601
970.945.1004
www.sgm-inc.com

Clifton Water District

Desert Road Pump Station

#	Revision	Date	By
1			
2			
3			

Project Milestone: FOR BID

Job No.	2025-354.02
Drawn by:	SK
Date:	07/23/2026
QC: BB	PE: BB
File:	DRPS-Admin

Title:

INSTRUMENTATION & CONTROLS

Dwg No.

I1

I:\2025\2025-354-CliftonWaterOnCallEngin\02-Desert Rd Pump Station\H-Dwgs\Civil\PS-SheetSet\DRPS-Admin.dwg Plotted: 7/24/2026 2:11 PM By: Sarah Kothlow